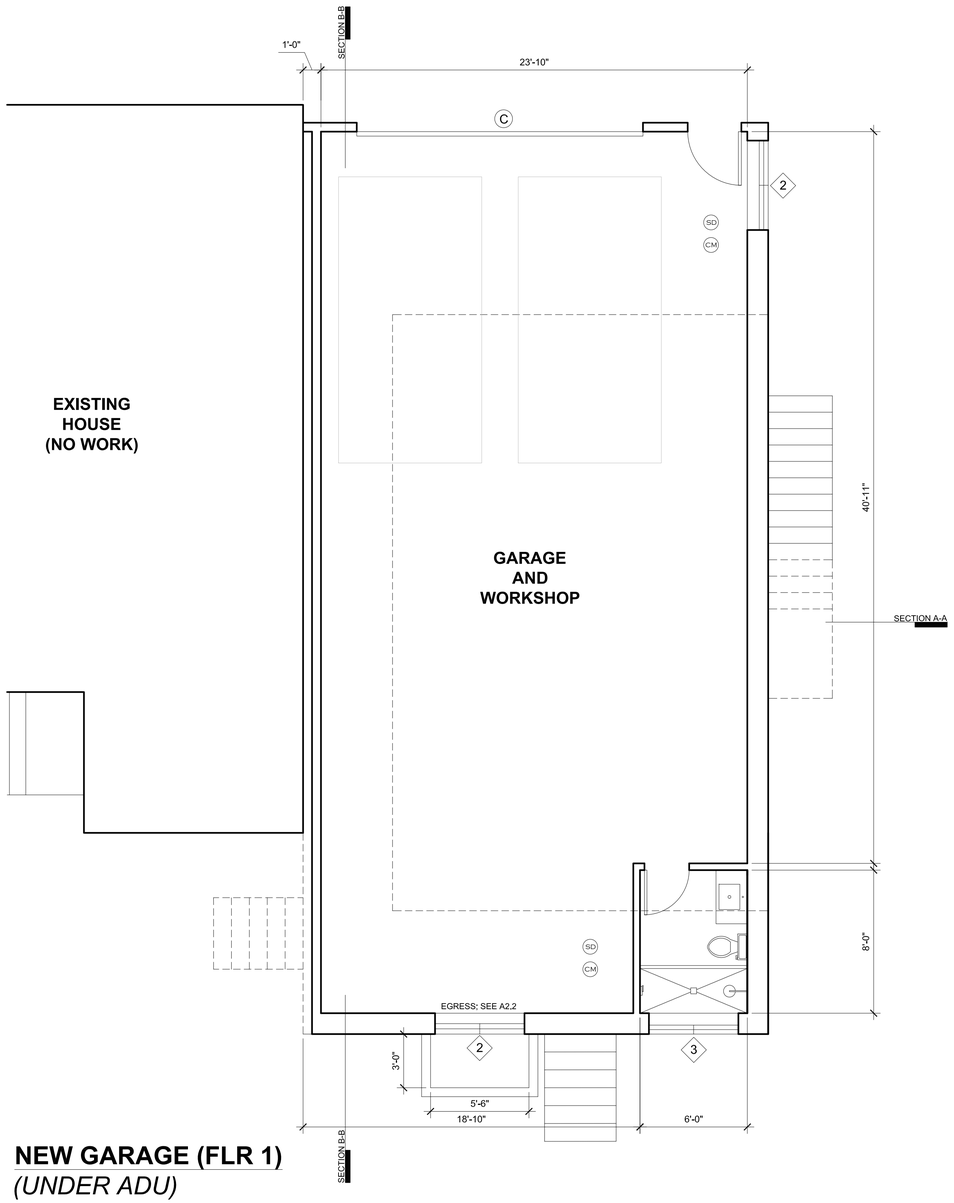

NEW GARAGE (FLR 1)
(UNDER ADU)
1325 SF

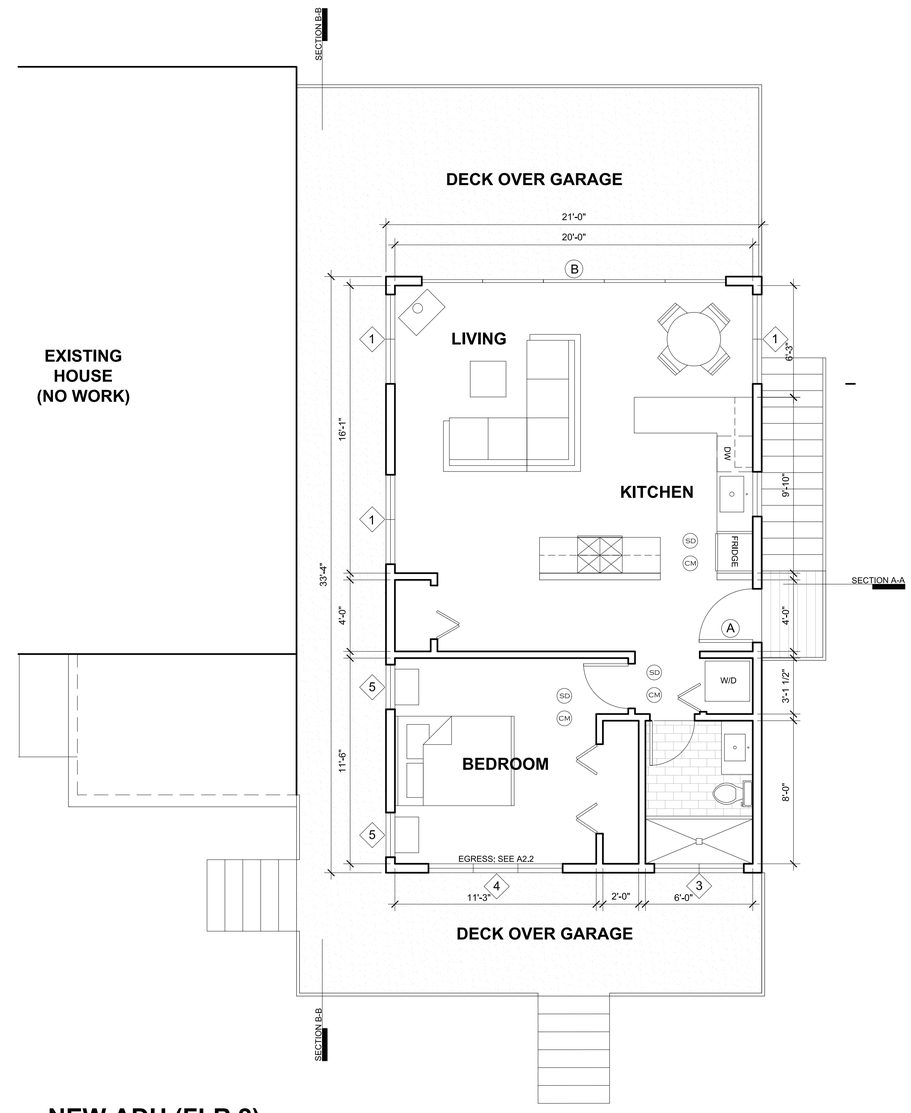

NEW ADU (FLR 2)
(OVER GARAGE)
700 SF

CHRISTINA
MERKELBACH
DESIGN

3444 S. Mount Baker Blvd
Seattle, WA 98144

christinamerk@christinamerk.com
www.christinamerk.com

206-920-8502

license

consultant logo

project name

SAFFOLD
ADU
514 WASHINGTON AVE
MUKILTEO WA 98275

submittals/revisions

-------- XX.XX.XXXX

drawing title

FLOOR PLANS

drawing information

DATE	10-31-2023
SCALE	1/8" = 1'
DRAWN	CEM
JOB #	22-013

copyright

sheet number

A1-0

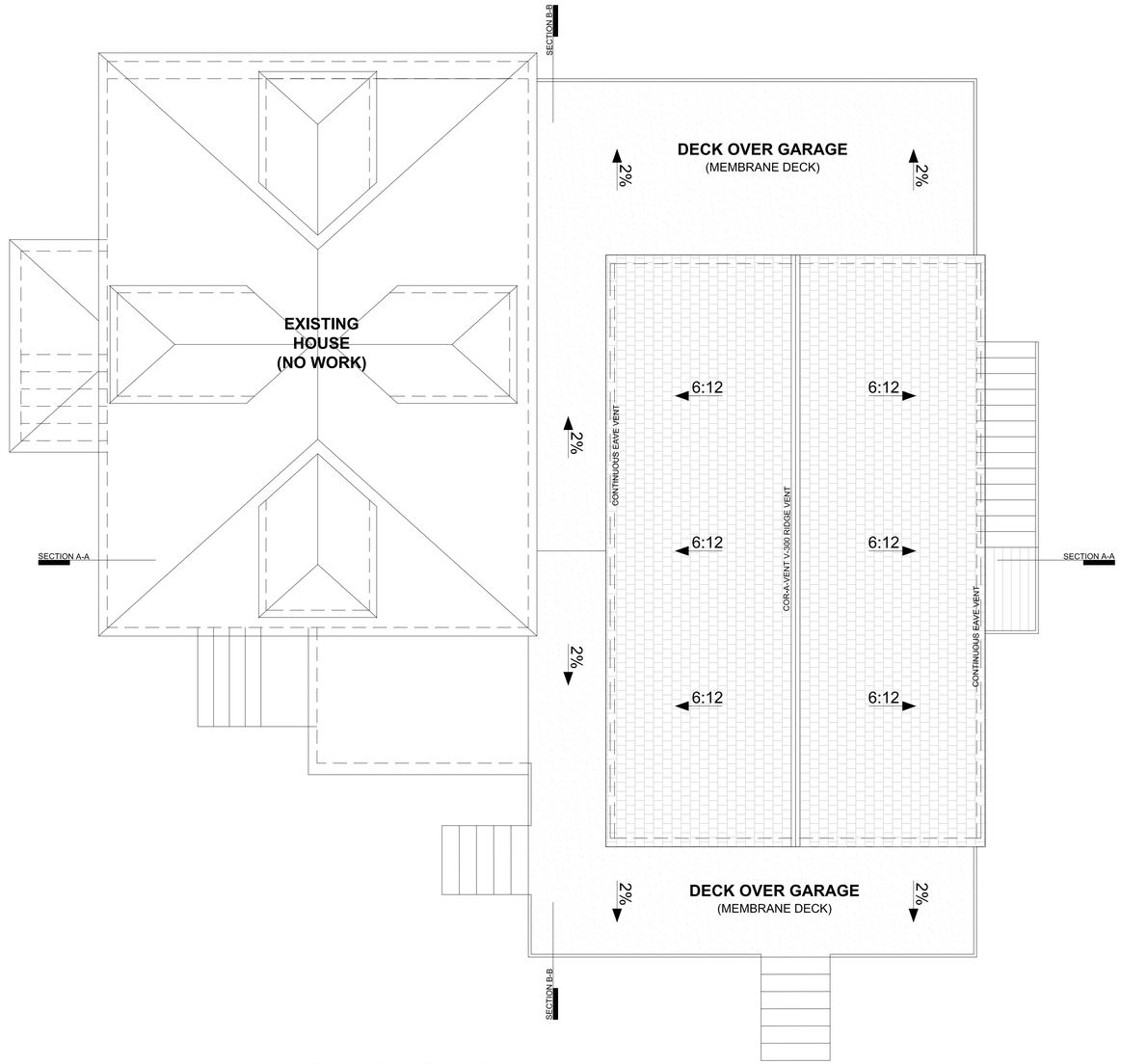

NEW ADU (ROOF)
(OVER GARAGE)
700 SF

ROOF VENTILATION NOTES:

- 1 SF VENTILATION REQUIRED FOR EVERY 150 SF OF AREA TO BE VENTED
- 702 SF ROOF AREA / 150 SF = 4.7 SF REQUIRED VENTILATION AREA
- FOR AIR INTAKE AT THE LOWER PORTIONS OF THE ROOF AT THE EAVES WHERE WE ARE LESS THAN 5' FROM THE PL, WE WILL PROVIDE EAVE VENTS PER DETAIL 2 / A3.0
  - WE WILL INSTALL 66 LF OF 1" EAVE VENTS FOR 5.5 SF OF VENTING (66 LF X 1" = 5.5 SF)
- IN THE UPPER PARTS OF THE ROOF, FOR AIR OUTLET AT THE RIDGE, WE WILL USE COR-A-VENT v-300 RIDGE VENTILATION; IT PROVIDES .1 SF VENTILATION PER LINEAL FOOT
  - WE WILL INSTALL 33 LF VENTING OF COR-A-VENT AT THE RIDGES PROVIDING 3.3 SF VENTILATION (70 LF X .1 SF = 3.3 SF)
- TO SUMMARIZE, WE ARE PROVIDING 5.5 SF INTAKE VENTILATION AT THE EAVES AND 3.3 SF OUTLET VENTILATION AT THE RIDGE OF THE ROOF, FOR A TOTAL VENTING AREA OF 8.8 SF, WHICH EXCEEDS THE REQUIRED 4.7 SF.

CHRISTINA
MERKELBACH
DESIGN

3444 S. Mount Baker Blvd
Seattle, WA 98144

christinamerk@christinamerk.com
www.christinamerk.com

206-920-8502

license

consultant logo

project name

SAFFOLD
ADU
514 WASHINGTON AVE
MUKILTEO WA 98275

submittals/revisions

-------	XX.XX.XXXX

drawing title

ROOF PLAN

drawing information

DATE	**10-31-2023**
SCALE	**1/8" = 1'**
DRAWN	**CEM**
JOB #	**22-013**

copyright

sheet number

A1-1

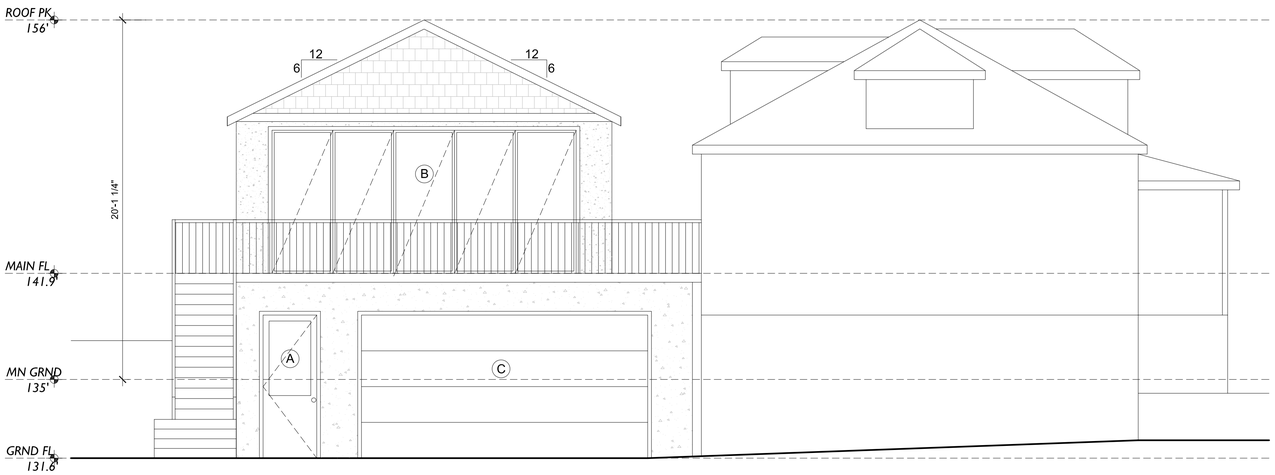

NORTHWEST ELEVATION

GENERAL STAIR NOTES:
PER SRC R311.7 ALL NEW STAIRCASES WILL HAVE:
- MIN. 36" WIDTH
- MAX. 7-3/4" RISE AND MIN. 10" RUN
- MIN. 6'-8" HEADROOM
- MIN. 3' LANDING LEGNTH

GENERAL HANDRAIL NOTES:
PER SRC R311.7.7 ALL NEW HANDRAILS WILL HAVE:
- LOCATION 34"-38" ABOVE STAIR NOSING
- GRASP DIMENSION BETWEEN 1-1/4" - 2"
- CONTINUOUS HANDRAIL OR TERMINATE AT NEWEL POSTS
- WHERE USED AS A GUARDRAIL MAX. 4" OPENING

GENERAL GUARDRAIL NOTES:
PER SRC R311.7.7 ALL NEW HANDRAILS WILL HAVE:
- MIN. 36" HEIGHT
- MAX. 4" OPENING SUCH THAT A SPHERE CANNOT PASS THROUGH
- DESIGNED TO RESIST A 200 LB CONCENTRATED LOAD ON TOP RAIL AND 50 PSF ON ALL INFILL COMPONENTS.

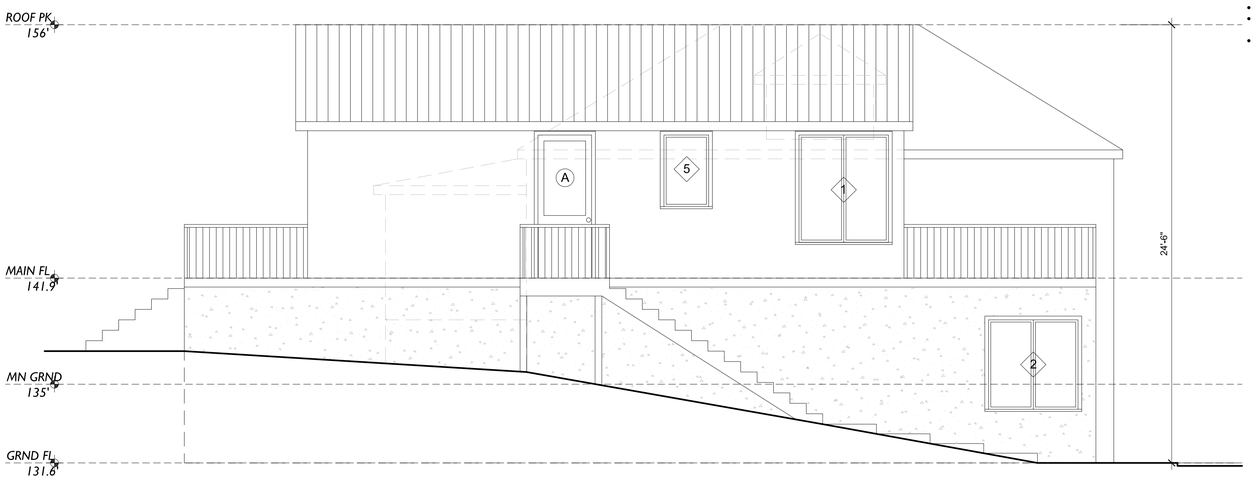

NORTHEAST ELEVATION

CHRISTINA
MERKELBACH
DESIGN

3444 S. Mount Baker Blvd
Seattle, WA 98144

christinamerk@christinamerk.com
www.christinamerk.com

206-920-8502

license

consultant logo

project name

SAFFOLD
ADU
514 WASHINGTON AVE
MUKILTEO WA 98275

submittals/revisions

-------	XX.XX.XXXX

drawing title

ELEVATIONS

drawing information

DATE	10-31-2023
SCALE	1/8" = 1'
DRAWN	CEM
JOB #	22-013

copyright

sheet number

A2-0

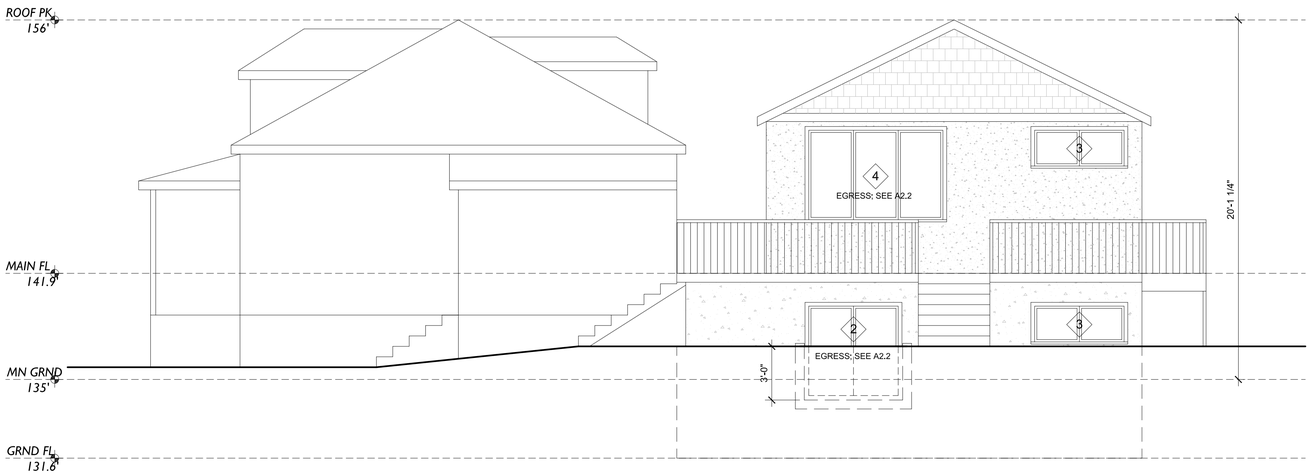

SOUTHEAST ELEVATION

GENERAL STAIR NOTES:
PER SRC R311.7 ALL NEW STAIRCASES WILL HAVE:
- MIN. 36" WIDTH
- MAX. 7-3/4" RISE AND MIN. 10" RUN
- MIN. 6'-8" HEADROOM
- MIN. 3' LANDING LEGNTH

GENERAL HANDRAIL NOTES:
PER SRC R311.7.7 ALL NEW HANDRAILS WILL HAVE:
- LOCATION 34"-38" ABOVE STAIR NOSING
- GRASP DIMENSION BETWEEN 1-1/4" - 2"
- CONTINUOUS HANDRAIL OR TERMINATE AT NEWEL POSTS
- WHERE USED AS A GUARDRAIL MAX. 4" OPENING

GENERAL GUARDRAIL NOTES:
PER SRC R311.7.7 ALL NEW HANDRAILS WILL HAVE:
- MIN. 36" HEIGHT
- MAX. 4" OPENING SUCH THAT A SPHERE CANNOT PASS THROUGH
- DESIGNED TO RESIST A 200 LB CONCENTRATED LOAD ON TOP RAIL AND 50 PSF ON ALL INFILL COMPONENTS.

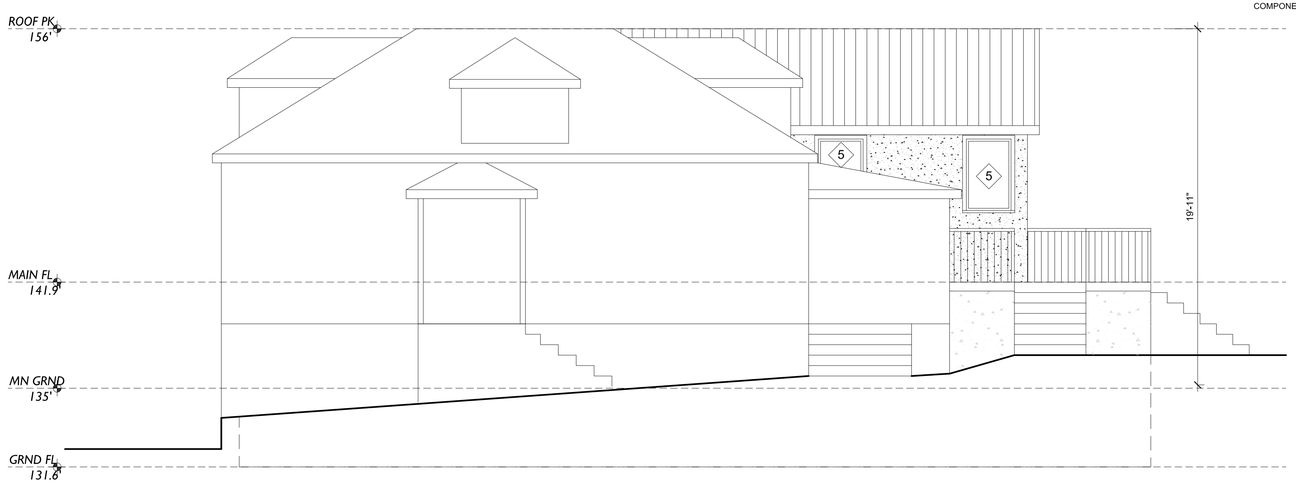

SOUTHWEST ELEVATION

CHRISTINA
MERKELBACH
DESIGN

3444 S. Mount Baker Blvd
Seattle, WA 98144

christinamerk@christinamerk.com
www.christinamerk.com

206-920-8502

license

consultant logo

project name

SAFFOLD
ADU
514 WASHINGTON AVE
MUKILTEO WA 98275

submittals/revisions

-------	XX.XX.XXXX

drawing title

ELEVATIONS

drawing information

DATE	10-31-2023
SCALE	1/8" = 1'
DRAWN	CEM
JOB #	22-013

copyright

sheet number

A2-1

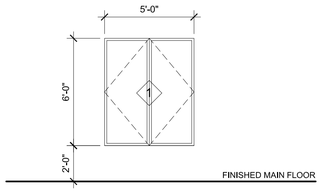

1 DOUBLE CASEMENT QTY: 3
ADU LIVING ROOM

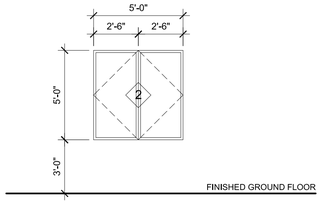

2 DOUBLE CASEMENT QTY: 2
GARAGE
EGRESS CLR OPENING 9.6 SF
EGRESS CLEAR WIDTH 26"
EGRESS CLEAR HEIGHT 52"

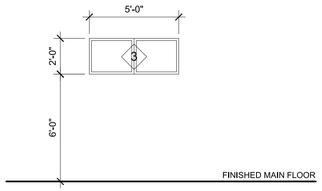

3 DOUBLE AWNING QTY: 2
ADU BATHROOM & GARAGE BATHROOM

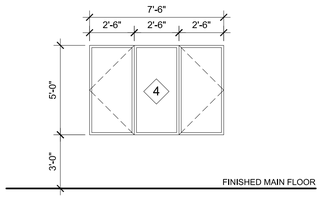

4 FIXED AND CASEMENT QTY: 1
ADU BEDROOM
EGRESS CLR OPENING 9.6 SF
EGRESS CLEAR WIDTH 26"
EGRESS CLEAR HEIGHT 52"

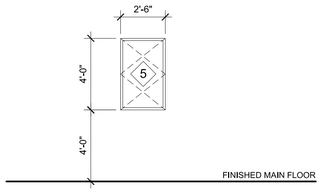

5 CASEMENT QTY: 3
ADU KITCHEN & BEDROOM

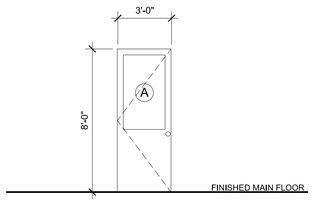

A EXT SWING DOOR QTY: 2
ADU & GARAGE ENTRY
HINGE LEFT
INSWING
2 X 6 JAMB

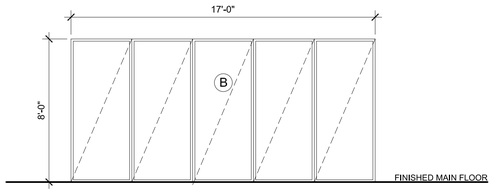

B EXT FRENCH SLIDER QTY: 1
ADU LIVING ROOM
2 X 6 JAMB

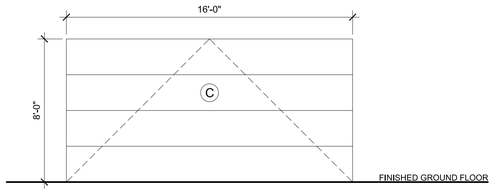

C GARAGE DOOR QTY: 1
GARAGE
2 X 6 JAMB

CHRISTINA
MERKELBACH
DESIGN

3444 S. Mount Baker Blvd
Seattle, WA 98144

christinamerk@christinamerk.com
www.christinamerk.com

206-920-8502

license

consultant logo

project name

SAFFOLD
ADU
514 WASHINGTON AVE
MUKILTEO WA 98275

submittals/revisions

-------	XX.XX.XXXX

drawing title

WINDOWS AND DOORS

drawing information

DATE	**10-31-2023**
SCALE	**1/8" = 1'**
DRAWN	**CEM**
JOB #	**22-013**

copyright

sheet number

A2-2

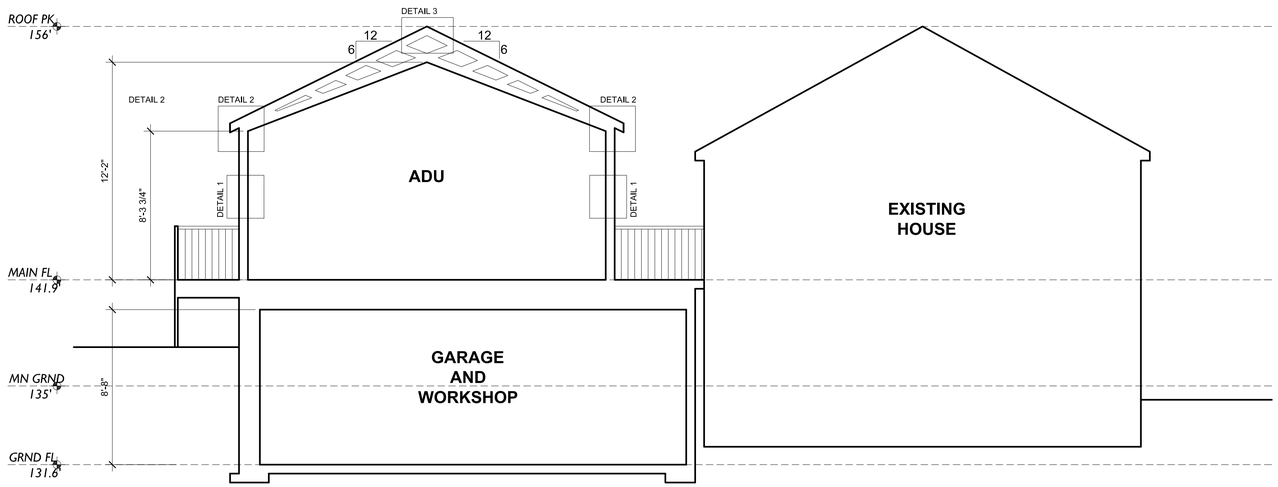

SECTION A-A

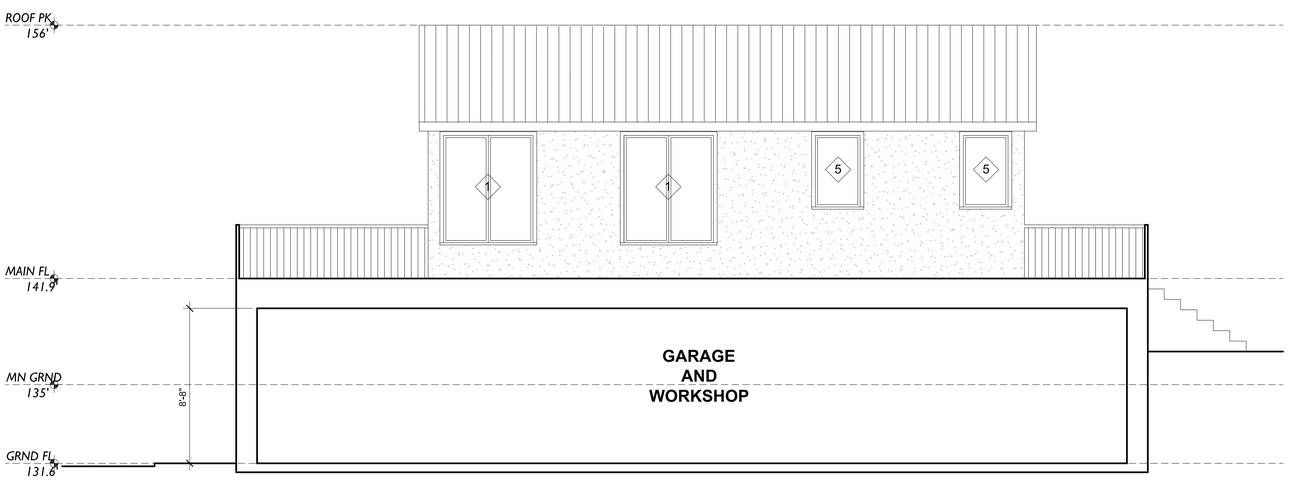

SECTION B-B

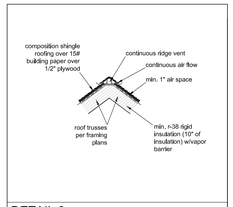

DETAIL 3: TYP. ROOF SECT. AT RIDGE
SCALE: $\frac{3}{4}$" = 1'

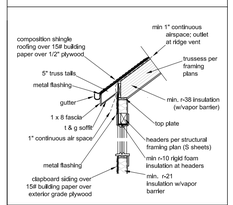

DETAIL 2: TYP. ROOF SECTION @ EAVE
SCALE: $\frac{3}{4}$" = 1'

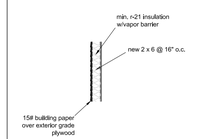

DETAIL 1: TYP EXT. FRAMED WALL SECTION
SCALE: $\frac{1}{2}$" = 1'

CHRISTINA
MERKELBACH
DESIGN

3444 S. Mount Baker Blvd
Seattle, WA 98144

christinamerk@christinamerk.com
www.christinamerk.com

206-920-8502

license

consultant logo

project name

SAFFOLD
ADU
514 WASHINGTON AVE
MUKILTEO WA 98275

submittals/revisions

-------	XX.XX.XXXX

drawing title

SECTIONS

drawing information

DATE	10-31-2023
SCALE	1/8" = 1'
DRAWN	CEM
JOB #	22-013

copyright

sheet number

A3-0

GENERAL STRUCTURAL NOTES

(The following apply unless shown otherwise on the plans)

CRITERIA

1. ALL MATERIALS, WORKMANSHIP, DESIGN, AND CONSTRUCTION SHALL CONFORM TO THE DRAWINGS, SPECIFICATIONS, AND THE INTERNATIONAL BUILDING CODE (2018 EDITION).

2. DESIGN LOADING CRITERIA

FLAT-ROOF SNOW LOAD, P_F = 20 PSF
GROUND SNOW LOAD, P_G = 25 PSF
C_E = 0.9
I_S = 1.0
C_T = 1.0
C_S = 1.0

ROOF LIVE LOAD (SNOW, IRREDUCIBLE, NOT INCLUDING DRIFT)	25 PSF
ROOF LIVE LOAD (TENANT ACCESSIBLE)	60 PSF
FLOOR LIVE LOAD (RESIDENTIAL)	40 PSF
FLOOR LIVE LOAD (RESIDENTIAL BALCONIES)	60 PSF
FLOOR LIVE LOAD (STORAGE)	125 PSF
STAIR AND CORRIDOR LIVE LOAD, NON REDUCIBLE	100 PSF UNIFORM, 300 LB CONCENTRATED
MECHANICAL UNITS	WEIGHTS FURNISHED BY MANUFACTURER

DESIGN LOADING CRITERIA - LATERAL LOADS

WIND: V_{ULT} = 100 MPH (3-SECOND GUST), V_{ASD} = 78 MPH (3-SECOND GUST) PER IBC 1609.3.1
ENCLOSED BUILDING, EXPOSURE 'C', KZT=1.0
ENVELOPE PROCEDURE - METHOD 2 PER ASCE 7-16 CH 28

EARTHQUAKE: RISK CATEGORY 2, IE =1.0
SS =1.405, S1 = 0.50,
SITE CLASS = D (ASSUMED),
SDS = 1.124, SD1 = 0.60,
SDC = D,
BSFRS = PLYWOOD SHEAR WALLS R = 6.5
BSFRS = SPECIAL CONCRETE SHEAR WALLS R = 6.0
CDX SWS CS =0.173, RHO =1.3 CONC SWS CS =0.225, RHO =1.3
DESIGN BASE SHEAR V=22.8K CDX SW, V= 29.6K CONC SW
EQUIVALENT LATERAL FORCE PROCEDURE

DESIGN LOADING CRITERIA - DEAD LOADS

ROOF DEAD LOAD (DECK)	60 PSF
ROOF DEAD LOAD	25 PSF
FLOOR DEAD LOAD (RESIDENTIAL UPPER FLOORS)	18 PSF
WOOD FRAMED WALL DEAD LOAD (INTERIOR/EXTERIOR)	9/13 PSF
CONCRETE WALL DEAD LOAD (8" WALLS)	100 PSF

SEE PLANS FOR ADDITIONAL LOADING CRITERIA

3. STRUCTURAL DRAWINGS SHALL BE USED IN CONJUNCTION WITH ARCHITECTURAL AND ALL OTHER DISCIPLINES' DRAWINGS FOR BIDDING AND CONSTRUCTION. CONTRACTOR SHALL VERIFY DIMENSIONS AND CONDITIONS FOR COMPATIBILITY AND SHALL NOTIFY ARCHITECT OF ANY DISCREPANCIES PRIOR TO CONSTRUCTION.

DISCREPANCIES: THE CONTRACTOR SHALL INFORM THE ENGINEER IN WRITING, DURING THE BIDDING PERIOD, OF ANY DISCREPANCIES OR OMISSIONS NOTED ON THE DRAWINGS OR IN THE SPECIFICATIONS OR OF ANY VARIATIONS NEEDED IN ORDER TO CONFORM TO CODES, RULES AND REGULATIONS. UPON RECEIPT OF SUCH INFORMATION, THE ENGINEER WILL SEND WRITTEN INSTRUCTIONS TO ALL CONCERNED. ANY SUCH DISCREPANCY, OMISSION, OR VARIATION NOT REPORTED SHALL BE THE RESPONSIBILITY OF THE CONTRACTOR, AND WORK SHALL BE PERFORMED IN A MANNER AS DIRECTED BY THE ENGINEER.

4. CONTRACTOR SHALL VERIFY ALL EXISTING DIMENSIONS, MEMBER SIZES, AND CONDITIONS PRIOR TO COMMENCING ANY WORK. ALL DIMENSIONS OF EXISTING CONSTRUCTION SHOWN ON THE DRAWINGS ARE INTENDED AS GUIDELINES ONLY AND MUST BE FIELD VERIFIED BY THE CONTRACTOR OR THE CONTRACTOR'S SUBCONTRACTOR.

5. CONTRACTOR SHALL PROVIDE TEMPORARY BRACING FOR THE STRUCTURE AND STRUCTURAL COMPONENTS UNTIL ALL FINAL CONNECTIONS HAVE BEEN COMPLETED IN ACCORDANCE WITH THE PLANS. ERECTION PLANS AND INSTALLATION OF SHORING SYSTEMS ARE THE RESPONSIBILITY OF THE CONTRACTOR AND THE SHORING SUPPLIER. THE SHORING SHALL NOT BE SUPPORTING ON THE EXISTING STRUCTURE.

CHANGES IN FIELD CONDITIONS DURING CONSTRUCTION WILL REQUIRE RE-EVALUATION BY THE CONTRACTOR AND THEIR SHORING INSTALLER.

6. CONTRACTOR SHALL BE RESPONSIBLE FOR ALL SAFETY PRECAUTIONS AND THE METHODS, TECHNIQUES, SEQUENCES OR PROCEDURES REQUIRED TO PERFORM THE WORK.

7. CONTRACTOR-INITIATED CHANGES SHALL BE SUBMITTED IN WRITING TO THE ARCHITECT AND STRUCTURAL ENGINEER FOR APPROVAL PRIOR TO FABRICATION OR CONSTRUCTION. CHANGES SHOWN ONLY ON SHOP DRAWINGS WILL NOT SATISFY THIS REQUIREMENT.

8. DRAWINGS INDICATE GENERAL AND TYPICAL DETAILS OF CONSTRUCTION. WHERE CONDITIONS ARE NOT SPECIFICALLY INDICATED BUT ARE OF SIMILAR CHARACTER TO DETAILS SHOWN, SIMILAR DETAILS OF CONSTRUCTION SHALL BE USED, SUBJECT TO REVIEW AND APPROVAL BY THE ARCHITECT AND THE STRUCTURAL ENGINEER.

9. ALL STRUCTURAL SYSTEMS WHICH ARE TO BE COMPOSED OF FIELD ERECTED COMPONENTS SHALL BE SUPERVISED BY THE SUPPLIER DURING MANUFACTURING, DELIVERY, HANDLING, STORAGE AND ERECTION IN ACCORDANCE WITH INSTRUCTIONS PREPARED BY THE SUPPLIER.

10. SHOP DRAWINGS FOR
REINFORCING STEEL (FOR CONCRETE CONSTRUCTION),
GLUED LAMINATED MEMBERS,
LAMINATED VENEER LUMBER (LVL) MEMBERS,
PARALLEL STRAND LUMBER (PSL), LAMINATED STRAND LUMBER (LSL) MEMBERS,
CONNECTOR PLATE WOOD ROOF TRUSSES,
PLYWOOD WEB JOISTS
SHALL BE SUBMITTED TO THE ARCHITECT AND STRUCTURAL ENGINEER FOR REVIEW PRIOR TO FABRICATION OF THESE ITEMS.

CONTRACTOR SHALL SUBMIT WALL ELEVATION DRAWINGS OF AT LEAST 1/8" = 1'-0" SCALE INDICATING CONNECTION EMBEDMENTS AND WALL OPENINGS FOR REVIEW PRIOR TO CONSTRUCTION. CONTRACTOR SHALL COORDINATE WITH REINFORCEMENT SHOP DRAWINGS.

CONTRACTOR SHALL SUBMIT SHOP DRAWINGS AND DETAILS DRAWN BY THE FABRICATOR. SHOP DRAWINGS SHALL BE MINIMUM 24" X 36" SHEETS (HALF SIZE SETS ACCEPTABLE). COPIES OF THE STRUCTURAL DRAWINGS WILL NOT BE ACCEPTED.

11. SHOP DRAWING REVIEW: DIMENSIONS AND QUANTITIES ARE NOT REVIEWED BY THE ENGINEER OF RECORD, THEREFORE MUST BE VERIFIED BY THE CONTRACTOR. CONTRACTOR SHALL REVIEW AND STAMP ALL SHOP DRAWINGS PRIOR TO SUBMITTING FOR REVIEW BY ENGINEER OF RECORD. SUBMISSIONS SHALL INCLUDE A REPRODUCIBLE AND ONE COPY. REPRODUCIBLE WILL BE MARKED AND RETURNED. FOLLOWING CONTRACTOR REVIEW AND APPROVAL, SHOP DRAWINGS SHALL BE SUBMITTED TO THE ENGINEER OF RECORD ALLOWING FOR A TURN AROUND TIME OF AT LEAST 14 DAYS.

RESUBMITTALS OF PREVIOUSLY SUBMITTED SHOP DRAWINGS SHALL HAVE ALL CHANGES CLOUDED AND DATED WITH A SEQUENTIAL REVISION NUMBER. CONTRACTOR SHALL REVIEW AND STAMP ALL REVISED AND RESUBMITTED SHOP DRAWINGS PRIOR TO SUBMITTAL AND REVIEW BY THE ENGINEER OF RECORD ALLOWING FOR A TURN AROUND TIME OF AT LEAST 7 DAYS.

SHOP DRAWING SUBMITTALS PROCESSED BY THE ENGINEER OF RECORD ARE NOT CHANGE ORDERS. THE PURPOSE OF SHOP DRAWING SUBMITTALS BY THE CONTRACTOR IS TO DEMONSTRATE TO THE ENGINEER THAT THE CONTRACTOR UNDERSTANDS THE DESIGN CONCEPT. THE CONTRACTOR DEMONSTRATES THIS UNDERSTANDING BY INDICATING WHICH MATERIAL THEY INTEND TO FURNISH AND INSTALL AND BY DETAILING THE FABRICATION AND INSTALLATION METHODS THEY INTEND TO USE. IF DEVIATIONS, DISCREPANCIES, OR CONFLICTS BETWEEN SHOP DRAWING SUBMITTALS AND THE CONTRACT DOCUMENTS ARE DISCOVERED EITHER PRIOR TO OR AFTER SHOP DRAWING SUBMITTALS ARE PROCESSED BY THE ENGINEER, THE DESIGN DRAWINGS AND SPECIFICATIONS SHALL CONTROL AND SHALL BE FOLLOWED.

12. DEFERRED SUBMITTALS SHALL INCLUDE THE DESIGNING PROFESSIONAL ENGINEER'S STAMP, STATE OF WASHINGTON AND BE APPROVED BY THE COMPONENT DESIGNER PRIOR TO CURSORY REVIEW BY THE ENGINEER OF RECORD FOR LOADS IMPOSED ON THE BASIC STRUCTURE. THE COMPONENT DESIGNER IS RESPONSIBLE FOR CODE CONFORMANCE AND ALL NECESSARY CONNECTIONS NOT SPECIFICALLY CALLED OUT ON ARCHITECTURAL OR STRUCTURAL DRAWINGS. DEFERRED SUBMITTALS SHALL INDICATE MAGNITUDE AND DIRECTION OF ALL LOADS IMPOSED ON BASIC STRUCTURE. DESIGN CALCULATIONS SHALL BE INCLUDED IN THE SUBMITTAL. THE ARCHITECT OR CONTRACTOR SHALL FORWARD DEFERRED SUBMITTALS TO THE BUILDING OFFICIAL FOR REVIEW.
DEFERRED SUBMITTALS FOR THIS PROJECT ARE:

CONCRETE MIX DESIGNS
CONNECTOR PLATE WOOD TRUSSES

INSPECTIONS

13. INSPECTION: CONCRETE CONSTRUCTION,
EXPANSION BOLTS AND THREADED EXPANSION INSERTS,
DRILLED AND EPOXIED BOLTS, RODS AND ANCHORS,
SHALL BE SUPERVISED IN ACCORDANCE WITH SECTION 110, SECTION 1704, AND SECTION 1708 OF THE INTERNATIONAL BUILDING CODE AND THE PROJECT SPECIFICATIONS BY A QUALIFIED TESTING AGENCY DESIGNATED BY THE ARCHITECT. THE ARCHITECT AND STRUCTURAL ENGINEER SHALL BE FURNISHED WITH COPIES OF ALL INSPECTION REPORTS AND TEST RESULTS.

14. STATEMENT OF SPECIAL INSPECTIONS SHALL CONFORM TO THE REQUIREMENTS OF SECTION 1705 OF THE 2018 IBC AS FOLLOWS:

A. THE FOLLOWING SYSTEMS WILL BE SUBJECT TO THE SEISMIC QUALITY ASSURANCE:
SPECIAL REINFORCED CONCRETE WALLS
CONCRETE FOUNDATIONS
HVAC DUCTWORK CONTAINING HAZARDOUS MATERIALS AND ANCHORAGE OF DUCTWORK
PIPING SYSTEMS AND MECHANICAL UNITS CONTAINING FLAMMABLE, COMBUSTIBLE OR HIGHLY TOXIC MATERIAL
ANCHORAGE OF ELECTRICAL EQUIPMENT FOR EMERGENCY POWER SYSTEMS
EXTERIOR WALL PANELS AND THEIR ANCHORAGE
SUSPENDED CEILINGS AND THEIR ANCHORAGE

B. SPECIAL INSPECTION AND TESTING OF SPECIAL REINFORCED CONCRETE WALLS AND CONCRETE FOUNDATIONS SHALL CONFORM TO IBC SECTION 1708.

C. THE TYPE AND FREQUENCY OF TESTING REQUIRED SHALL BE PER IBC SECTION 1708 AND 1704.

D. THE TYPE AND FREQUENCY OF SPECIAL INSPECTIONS REQUIRED SHALL BE PER IBC SECTION 1707 AND 1704.

E. THE TYPE AND FREQUENCY OF SPECIAL INSPECTIONS REQUIRED SHALL BE PER IBC SECTION 1706 AND 1704.

F. THE REQUIRED FREQUENCY AND DISTRIBUTION OF TESTING AND SPECIAL INSPECTION REPORTS SHALL BE THE RESPONSIBILITY OF THE INSPECTION/TESTING AGENCY. REPORTS SHALL BE SUBMITTED TO THE ARCHITECT AND ENGINEER OF RECORD WITHIN 14 DAYS OF INSPECTION.

G. STRUCTURAL OBSERVATION OF THE LATERAL AND GRAVITY STRUCTURAL SYSTEMS SHALL OCCUR AT APPROPRIATE INTERVALS DURING CONSTRUCTION. THE STRUCTURAL ENGINEER SHALL OBSERVE THAT THE WORK IS PROGRESSING IN GENERAL CONFORMANCE WITH THE CONTRACT DOCUMENTS AND ACCORDING TO THE DESIGN INTENT.

H. A STRUCTURAL OBSERVATION REPORT SHALL BE SUBMITTED TO THE ARCHITECT OF RECORD AFTER EACH OBSERVATION.

GEOTECHNICAL

15. FOUNDATION AND SLAB NOTES: SUB-GRADE PREPARATION INCLUDING DRAINAGE, EXCAVATION, COMPACTION, AND FILLING REQUIREMENTS, SHALL CONFORM STRICTLY WITH RECOMMENDATIONS GIVEN BY THE INDIVIDUAL TESTING AGENCY OR LOCAL BUILDING OFFICIAL AT THE TIME OF EXCAVATION.

FOOTINGS SHALL BEAR ON SOLID UNDISTURBED EARTH (CONTROLLED, COMPACTED STRUCTURAL FILL OR BOTH) AT LEAST 18" BELOW LOWEST ADJACENT FINISHED GRADE. FOOTING DEPTHS/ELEVATIONS SHOWN ON PLANS (OR IN DETAILS) ARE MINIMUM AND FOR GUIDANCE ONLY. THE ACTUAL ELEVATIONS OF FOOTINGS MUST BE ESTABLISHED BY THE CONTRACTOR IN THE FIELD WORKING WITH THE TESTING LAB OR BUILDING INSPECTOR. BACKFILL BEHIND ALL RETAINING WALLS WITH FREE DRAINING GRANULAR FILL AND PROVIDE FOR SUBSURFACE DRAINAGE.

ALLOWABLE SOIL PRESSURE	2000 PSF (ASSUMED)
LATERAL EARTH PRESSURE (RESTRAINED/UNRESTRAINED)	60 PCF/35 PCF (ASSUMED)
PASSIVE EARTH PRESSURE	300 PCF (ASSUMED)
SEISMIC EARTH PRESSURE	8H (ASSUMED)
COEFFICIENT OF FRICTION	0.4 (ASSUMED)

CONCRETE

16. CONCRETE SHALL BE MIXED, PROPORTIONED, CONVEYED AND PLACED IN ACCORDANCE WITH IBC SECTION 1905 AND ACI 301. STRENGTHS AT 28 DAYS AND MIX CRITERIA SHALL BE AS FOLLOWS:

TYPE OF CONSTRUCTION	28 DAY STRENGTHS AND EXPOSURE CLASSES PER ACI TABLE 4.2.1(F'C)	MAXIMUM SLUMP	MINIMUM CEMENT CONTENT PER CUBIC YARD
A. FOOTINGS	2,500 PSI (F0, S0, W0, C1)	5"	5 1/2 SACKS
B INTERIOR: SLABS ON GRADE & TOPPING SLABS& SLABS ON METAL DECK& STAIR LANDINGS AND TREADS	2,500 PSI (F0, S0, W0, C1)	5	5 1/2 SACKS
D. SITE RETAINING WALLS, EXTERIOR WALLS EXTENDING ≥ 12" ABOVE GRADE	4,500 PSI (F2, S0, W1, C1)	4"	6 1/2 SACKS
E. INTERIOR CONCRETE WALLS& INTERIOR BEAMS & COLUMNS	3,000 PSI (F0, S0, W0, C1)	4"	6 1/2 SACKS

MIXES SHALL BE PROPORTIONED SO AS NOT TO EXCEED THE MAXIMUM SLUMPS INDICATED.

THE MINIMUM AMOUNTS OF CEMENT AND MAXIMUM AMOUNTS OF WATER MAY BE CHANGED IF A CONCRETE PERFORMANCE MIX IS SUBMITTED TO THE STRUCTURAL ENGINEER AND THE BUILDING DEPARTMENT FOR APPROVAL TWO WEEKS PRIOR TO PLACING ANY CONCRETE. THE PERFORMANCE MIX SHALL INCLUDE THE AMOUNTS OF CEMENT, FINE AND COARSE AGGREGATE, WATER AND ADMIXTURES AS WELL AS THE WATER CEMENT RATIO, SLUMP, CONCRETE YIELD AND SUBSTANTIATING STRENGTH DATA IN ACCORDANCE WITH ACI 318 SECTION 5.3. REVIEW OF MIX SUBMITTALS BY THE ENGINEER OF RECORD INDICATES ONLY THAT INFORMATION PRESENTED CONFORMS GENERALLY WITH CONTRACT DOCUMENTS. CONTRACTOR OR SUPPLIER MAINTAINS FULL RESPONSIBILITY FOR SPECIFIED PERFORMANCE.

ALL CONCRETE WITH SURFACES EXPOSED TO STANDING WATER SHALL BE AIR-ENTRAINED WITH AN AIR⅛ENTRAINING AGENT CONFORMING TO ASTM C260-06, C494M-05A, C618-05, C989-06, AND C1017M-07. TOTAL AIR CONTENT SHALL BE IN ACCORDANCE WITH ACI 318 TABLE 4.4.1.

17. REINFORCING STEEL SHALL CONFORM TO ASTM A615 (INCLUDING SUPPLEMENT S1), GRADE 60, F_Y = 60,000 PSI. EXCEPTION: ANY BARS SPECIFICALLY NOTED ON THE DRAWINGS AS "GRADE 40", FY = 40,000 PSI. GRADE 60 REINFORCING BARS INDICATED ON DRAWINGS TO BE WELDED SHALL CONFORM TO ASTM A706. REINFORCING COMPLYING WITH ASTM A615(S1) MAY BE WELDED ONLY IF MATERIAL PROPERTY REPORTS INDICATING CONFORMANCE WITH WELDING PROCEDURES SPECIFIED IN A.W.S. D1.4 ARE SUBMITTED.

WELDED WIRE FABRIC SHALL CONFORM TO ASTM A-497.

18. REINFORCING STEEL SHALL BE DETAILED (INCLUDING HOOKS AND BENDS) IN ACCORDANCE WITH ACI SP-66 (04) DETAILING MANUAL AND THE LATEST EDITION OF ACI 318. LAP ALL CONTINUOUS REINFORCEMENT 30 BAR DIAMETERS OR 2'-0" MINIMUM. PROVIDE CORNER BARS AT ALL WALL AND FOOTING INTERSECTIONS. LAP CORNER BARS 30 BAR DIAMETERS OR 2'-0" MINIMUM. LAP ADJACENT MATS OF WELDED WIRE FABRIC A MINIMUM OF 8" AT SIDES AND ENDS.

NO BARS PARTIALLY EMBEDDED IN HARDENED CONCRETE SHALL BE FIELD BENT UNLESS SPECIFICALLY SO DETAILED OR APPROVED BY THE STRUCTURAL ENGINEER.

19. CONCRETE PROTECTION (COVER) FOR REINFORCING STEEL SHALL BE AS FOLLOWS:

FOOTINGS AND OTHER UNFORMED SURFACES, EARTH FACE		3"
FORMED SURFACES EXPOSED TO EARTH (I.E. WALLS BELOW GROUND) OR WEATHER	(#6 BARS OR LARGER)	2"
	(#5 BARS OR SMALLER)	1 1/2"
COLUMN TIES OR SPIRALS AND BEAM STIRRUPS		1 1/2"
SLABS AND WALLS (INTERIOR FACE)		3/4"

20. CONCRETE WALL REINFORCING⅛ PROVIDE THE FOLLOWING UNLESS DETAILED OTHERWISE:

8" WALLS	#4 @ 12 HORIZ.	#4 @ 12 VERTICAL	1 CURTAIN

21. CAST-IN-PLACE CONCRETE: SEE ARCHITECTURAL DRAWINGS FOR EXACT LOCATIONS AND DIMENSIONS OF DOOR AND WINDOW OPENINGS IN ALL CONCRETE WALLS. SEE MECHANICAL DRAWINGS FOR SIZE AND LOCATION OF MISCELLANEOUS MECHANICAL OPENINGS THROUGH CONCRETE WALLS. SEE ARCHITECTURAL DRAWINGS FOR ALL GROOVES, NOTCHES, CHAMFERS, FEATURE STRIPS, COLOR, TEXTURE, AND OTHER FINISH DETAILS AT ALL EXPOSED CONCRETE SURFACES, BOTH CAST-IN-PLACE AND PRECAST.

22. EMBEDDED ITEMS IN CAST-IN-PLACE CONCRETE: EMBEDDED ITEMS IN CAST-IN-PLACE CONCRETE SHALL NOT BE "WET-SET" UNLESS SPECIFICALLY APPROVED BY ENGINEER OF RECORD. THESE ITEMS INCLUDE, BUT ARE NOT LIMITED TO, REINFORCING STEEL, ANCHOR BOLTS, DEFORMED BAR ANCHORS, EMBED PLATES, OR OTHER MISC. STEEL SHAPES TO BE CAST INTO CONCRETE.

23. NON-SHRINK GROUT SHALL BE FURNISHED BY AN APPROVED MANUFACTURER AND SHALL BE MIXED AND PLACED IN STRICT ACCORDANCE WITH THE MANUFACTURER'S PUBLISHED RECOMMENDATIONS. GROUT STRENGTH SHALL BE AT LEAST EQUAL TO THE MATERIAL ON WHICH IT IS PLACED (3000 PSI MINIMUM). GROUT IN BLOCKOUTS AT POST-TENSIONED SLAB DOWELS SHALL BE CAPABLE OF RESISTING DYNAMIC, REPETITIVE LOADING INDUCED BY SEISMIC FORCES.

24. EPOXY-GROUTED ITEMS SPECIFIED ON THE DRAWINGS SHALL BE GROUTED WITH HIT-RE 500 V3 ADHESIVE ANCHOR SYSTEMS AS MANUFACTURED BY HILTI, INC. OR PURE110+ ADHESIVE ANCHOR SYSTEM AS MANUFACTURED BY DEWALT - POWERS OR AN ENGINEER APPROVED ALTERNATE THAT HAS I.C.C TEST DATA FOR THEIR SPECIFIC PRODUCT AND APPLICATION. INSTALL IN STRICT ACCORDANCE WITH I.C.C REPORTS FOR SPECIFIC EPOXY UNLESS NOTED OTHERWISE ON THE STRUCTURAL DRAWINGS. HOLE SIZE SHALL BE 1/8" LARGER THAN BAR, ROD OR BOLT SIZE. NOTE: NO WELDING IS TO TAKE PLACE WITHIN 24" OF HARDENED EPOXY.

25. MECHANICAL SPLICING OF REINFORCING BARS, WHERE INDICATED ON THE DRAWINGS, SHALL BE BY AN I.C.B.O. APPROVED SYSTEM (SUCH AS LENTON, FOX-HOWLETT, ETC.) AND SHALL DEVELOP 125% OF THE SPECIFIED YIELD STRENGTH OF THE BARS. SPLICE LOCATIONS OF ALTERNATE BARS SHALL BE OFFSET BY A DISTANCE WHICH CONFORMS TO THE ICC REPORT OF THE SPLICE USED AND TO ACI 318 SECTION 21.1.6.

26. EXPANSION BOLTS INTO CONCRETE SHALL BE KWIK BOLT TZ WEDGE ANCHORS AND THREADED EXPANSION INSERTS INTO CONCRETE OR CONCRETE MASONRY UNIT SHALL BE KWIK BOLT 3 MASONRY ANCHORS AS MANUFACTURED BY HILTI, INC OR APPROVED EQUAL. INSTALLED IN STRICT ACCORDANCE WITH THE MANUFACTURER'S PUBLISHED RECOMMENDATIONS, INCLUDING MINIMUM EMBEDMENT REQUIREMENTS. INSERTS INTO CONCRETE MASONRY UNITS SHALL BE INTO FULLY GROUTED CELLS. SPECIAL INSPECTION IS REQUIRED FOR ALL EXPANSION BOLT AND INSERT INSTALLATION. ANCHORS SHALL HAVE A CURRENT ICC REPORT.

WOOD

27. FRAMING LUMBER SHALL BE KILN DRIED, AND GRADED AND MARKED IN CONFORMANCE WITH W.C.L.B. STANDARD GRADING RULES FOR WEST COAST LUMBER NO. 16, LATEST EDITION. FURNISH TO THE FOLLOWING MINIMUM STANDARDS, UNLESS OTHERWISE NOTED ON THE PLANS:

JOISTS: (2 X MEMBERS)	DOUG FIR #2 MINIMUM BASIC DESIGN STRESS, FB = 900 PSI
(3 X AND 4 X MEMBERS)	DOUG FIR #1 MINIMUM BASIC DESIGN STRESS, FB = 1000 PSI
BEAMS AND STRINGERS: (INCLUDING 6 X 10 AND LARGER MEMBERS)	DOUG FIR #1 MINIMUM BASIC DESIGN STRESS, FB = 1200 PSI
POSTS AND TIMBERS: (6 X 6 AND LARGER)	DOUG FIR #2 MINIMUM BASIC DESIGN STRESS, FB = 900 PSI
STUDS, PLATES & MISCELLANEOUS LIGHT FRAMING:	DOUG FIR STANDARD GRADE MINIMUM BASIC DESIGN STRESS, FB = 575 PSI
BOLTED FRAMING: STUDS, LEDGERS, AND PLATES	DOUG FIR #2 MINIMUM BASIC DESIGN STRESS, FB = 900 PSI
FRAMING MEMBERS NOTED AS PRESSURE TREATED (PT) (INCLUDING LEDGERS, PLATES, STUDS, POSTS, JOISTS & BEAMS)	HEM FIR #2 MINIMUM BASIC DESIGN STRESS, FB = 850 PSI

28. GLUED LAMINATED MEMBERS SHALL BE FABRICATED IN CONFORMANCE WITH ANSI / AITC A190.1-2002, AMERICAN NATIONAL STANDARDS INSTITUTE AND ASTM D3737-05. EACH MEMBER SHALL BEAR AN A.I.T.C. IDENTIFICATION MARK AND SHALL BE ACCOMPANIED BY AN A.I.T.C. CERTIFICATE OF CONFORMANCE. ALL SIMPLE SPAN BEAMS SHALL BE DOUGLAS FIR COMBINATION 24F-V4, F_B= 2,400 PSI, F_V= 165 PSI. ALL CANTILEVERED BEAMS SHALL BE DOUGLAS FIR COMBINATION 24F-V8, F_B= 2400 PSI, F_V= 165 PSI. CAMBER ALL GLULAM BEAMS TO 2,000 FT RADIUS, UNLESS SHOWN OTHERWISE ON THE PLANS. USE "GLT" SERIES HANGERS AS REQUIRED TO FIT GLU-LAM BEAMS U.O.N.

29. ENGINEERED LUMBER SHALL BE DESIGNED AND MANUFACTURED TO THE STANDARDS SET FORTH IN ASTM D5456, ICC ES REPORT ESR-1387, AND THE CANADIAN CONSTRUCTION MATERIALS CENTRE (CCMC) REPORTS NO. 11161-R (PSL ONLY) AND 12627-R (LSL ONLY). EACH PIECE SHALL BEAR A STAMP OR STAMPS NOTING THE NAME AND PLANT NUMBER OF THE MANUFACTURER, THE GRADE, THE NATIONAL RESEARCH BOARD NUMBER, AND THE QUALITY CONTROL AGENCY. ALL MEMBERS ARE TO BE FREE OF MECHANICAL CONNECTIONS IN FULL-LENGTH MEMBERS. ADHESIVES SHALL BE OF THE WATERPROOF TYPE CONFORMING TO THE REQUIREMENTS OF ASTM D-2559.

PARALLEL STRAND LUMBER (PSL): F_B = 2900 PSI, E=2.0X 10^6 PSI, F_V =285 PSI.
LAMINATED STRAND LUMBER (LSL): F_B = 2250 PSI, E=1.5X 10^6 PSI, F_V =400 PSI.
LAMINATED VENEER LUMBER (LVL): F_B = 2800 PSI, E=2.0X 10^6 PSI, F_V =270 PSI

DESIGN SHOWN ON PLANS IS BASED ON THE ABOVE MINIMUM MATERIAL PROPERTIES. ALTERNATE PRODUCTS MAY BE USED SUBJECT TO REVIEW AND APPROVAL BY THE ARCHITECT AND STRUCTURAL ENGINEER, ALTERNATE JOIST HANGERS AND OTHER HARDWARE MAY BE SUBSTITUTED FOR ITEMS SHOWN PROVIDED THEY HAVE ICC APPROVAL FOR EQUAL OR GREATER LOAD CAPACITIES. ALL PARALLAM BEAM HANGERS AND OTHER HARDWARE SHALL BE COMPATIBLE IN SIZE WITH BEAM PROVIDED, USE "GLTV" SERIES HANGERS AS REQUIRED TO FIT BEAM U.O.N.

30. PREFABRICATED PLYWOOD WEB JOISTS SHALL BE DESIGNED BY THE MANUFACTURER FOR THE SPANS AND CONDITIONS SHOWN ON THE PLANS AND SHALL BE FURNISHED AND INSTALLED IN CONFORMANCE WITH THE MANUFACTURER'S PUBLISHED SPECIFICATIONS. ALL NECESSARY BRIDGING, BLOCKING, BLOCKING PANELS, STIFFENERS, ETC., SHALL BE DETAILED AND FURNISHED BY THE MANUFACTURER. SUBMIT SHOP DRAWINGS AND DESIGN CALCULATIONS TO THE ARCHITECT AND STRUCTURAL ENGINEER FOR REVIEW PRIOR TO FABRICATION. DESIGN SUBMITTALS SHALL BEAR THE STAMP AND SIGNATURE OF A REGISTERED PROFESSIONAL ENGINEER, STATE OF WASHINGTON. PERMANENT AND TEMPORARY BRIDGING SHALL BE INSTALLED IN CONFORMANCE WITH MANUFACTURER'S SPECIFICATIONS.
DESIGN SHOWN ON PLANS IS BASED ON JOISTS MANUFACTURED BY THE TRUS-JOIST CORPORATION. ALTERNATE PLYWOOD WEB JOIST MANUFACTURERS MAY BE USED SUBJECT TO REVIEW AND APPROVAL BY THE ARCHITECT AND STRUCTURAL ENGINEER. ALTERNATE JOIST HANGERS AND OTHER HARDWARE MAY BE SUBSTITUTED FOR ITEMS SHOWN PROVIDED THEY HAVE ICC. APPROVAL FOR EQUAL OR GREATER LOAD CAPACITIES. ALL JOIST HANGERS AND OTHER HARDWARE SHALL BE COMPATIBLE IN SIZE WITH PLYWOOD WEB JOIST PROVIDED.

31. PREFABRICATED CONNECTOR PLATE WOOD ROOF TRUSSES SHALL BE DESIGNED BY THE MANUFACTURER IN ACCORDANCE WITH THE "NATIONAL DESIGN STANDARD FOR METAL PLATE CONNECTED WOOD TRUSS CONSTRUCTION, ANSI/TPI 1-2014" BY THE TRUSS PLATE INSTITUTE FOR THE SPANS AND CONDITIONS SHOWN ON THE PLANS. LOADING SHALL BE AS FOLLOWS:

TOP CHORD DEAD LOAD	15 PSF**
TOP CHORD LIVE LOAD	25 PSF
BOTTOM CHORD DEAD LOAD	5 PSF
TOTAL LOAD	40 PSF
BOTTOM CHORD LIVE LOAD (NON-CONCURRENT WITH TOP CHORD LIVE LOAD)	10 PSF

** SEE GSN # 2 FOR ADDITIONAL LOADING REQUIREMENTS PER PLAN

WOOD TRUSSES SHALL UTILIZE APPROVED CONNECTOR PLATES (GANGNAIL OR EQUAL). SUBMIT SHOP DRAWINGS AND DESIGN CALCULATIONS TO THE ARCHITECT AND STRUCTURAL ENGINEER FOR REVIEW PRIOR TO FABRICATION. SUBMITTED DOCUMENTS SHALL BEAR THE STAMP AND SIGNATURE OF A REGISTERED PROFESSIONAL ENGINEER, STATE OF WASHINGTON. PROVIDE FOR SHAPES, BEARING POINTS, INTERSECTIONS, HIPS, VALLEYS, ETC., SHOWN ON THE DRAWINGS. EXACT COMPOSITION OF SPECIAL HIP, VALLEY, AND INTERSECTION AREAS (USE OF GIRDER TRUSSES, JACK TRUSSES, STEP-DOWN TRUSSES, ETC.) SHALL BE DETERMINED BY THE MANUFACTURER UNLESS SPECIFICALLY INDICATED ON THE PLANS. PROVIDE ALL TRUSS TO TRUSS AND TRUSS TO GIRDER TRUSS CONNECTION DETAILS AND REQUIRED CONNECTION MATERIALS. PROVIDE FOR ALL TEMPORARY AND PERMANENT TRUSS BRACING AND BRIDGING.

32. PLYWOOD AND OSB SHEATHING SHALL BE GRADE C-D, EXTERIOR GLUE OR STRUCTURAL II, EXTERIOR GLUE IN CONFORMANCE WITH DOC PS1 AND DOC PS2. SEE PLANS FOR THICKNESS, PANEL IDENTIFICATION INDEX AND NAILING REQUIREMENTS.

33. ALL WOOD MEMBERS EXPOSED TO WEATHER OR IN DIRECT CONTACT WITH SOIL SHALL BE PRESSURE-TREATED WITH ALKALINE COPPER QUATERNARY (ACQ). ALL WOOD MEMBERS (INCLUDING PLATES) IN DIRECT CONTACT WITH CONCRETE OR MASONRY SHALL BE PRESSURE-TREATED WITH SODIUM BORATE (SBX).

ALL METAL CONNECTORS IN CONTACT WITH "ACQ" PRESSURE-TREATED LUMBER SHALL BE TYPE 304 OR 316 STAINLESS STEEL. THIS INCLUDES WASHERS, SCREWS, NAILS, HANGERS, AND ANY OTHER MISCELLANEOUS LT. GAGE METAL CONNECTORS. WHERE ACQ LUMBER IS USED IN INTERIOR CONDITIONS, G185 ("HOT-DIP" GALVANIZED TO 1.85 OUNCES PER SQUARE FOOT) METAL CONNECTORS MAY BE USED IN LIEU OF STAINLESS STEEL. METAL CONNECTORS 1/2" THICK OR GREATER NEED NOT BE GALVANIZED FOR INTERIOR USE. METAL CONNECTORS 1/2" THICK PLUS ARE TO BE GALVANIZED FOR EXTERIOR USE, UNLESS SPECIFIED OTHERWISE BY THE ARCHITECT.

34. TIMBER CONNECTORS CALLED OUT BY LETTERS AND NUMBERS SHALL BE "STRONG-TIE" BY SIMPSON COMPANY, AS SPECIFIED IN THEIR CATALOG NO.C-2021. EQUIVALENT DEVICES BY OTHER MANUFACTURERS MAY BE SUBSTITUTED, PROVIDED THEY HAVE ICBO APPROVAL FOR EQUAL OR GREATER LOAD CAPACITIES. PROVIDE NUMBER AND SIZE OF FASTENERS AS SPECIFIED BY MANUFACTURER. CONNECTORS SHALL BE INSTALLED IN ACCORDANCE WITH THE MANUFACTURER'S RECOMMENDATIONS. WHERE CONNECTOR STRAPS CONNECT TWO MEMBERS, PLACE ONE-HALF OF THE NAILS OR BOLTS IN EACH MEMBER. ALL BOLTS IN WOOD MEMBERS SHALL CONFORM TO ASTM A307. PROVIDE WASHERS UNDER THE HEADS AND NUTS OF ALL BOLTS AND LAG SCREWS BEARING ON WOOD. UNLESS NOTED OTHERWISE, ALL NAILS SHALL BE COMMON. ALL SHIMS SHALL BE SEASONED AND DRIED AND THE SAME GRADE (MINIMUM) AS MEMBERS CONNECTED.

ALL JOISTS SHALL BE CONNECTED TO FLUSH BEAMS WITH "U" SERIES JOIST HANGERS. ALL DOUBLE JOIST BEAMS SHALL BE CONNECTED TO FLUSH BEAMS WITH "HU" SERIES JOIST HANGERS. ALL TRIPLE-JOIST BEAMS SHALL BE CONNECTED TO FLUSH BEAMS WITH "HU" SERIES JOIST HANGERS.

35. HOLDOWNS CALLED OUT BY LETTERS "HDU", AND "HD", ARE MANUFACTURED BY THE SIMPSON COMPANY, AS SPECIFIED IN THEIR CATALOG NO.C-2021. EQUIVALENT DEVICES BY OTHER MANUFACTURERS MAY BE SUBSTITUTED, PROVIDED THEY HAVE ICC APPROVAL FOR EQUAL OR GREATER LOAD CAPACITIES. EACH SIMPSON HOLD-DOWN SHALL BE BOLTED TO A MINIMUM OF (2) STUDS. SEE SCHEDULE ON PLANS FOR FURTHER STUD REQUIREMENTS. PROVIDE NUMBER AND SIZE OF FASTENERS AS SPECIFIED BY MANUFACTURER. ALL HOLDOWNS SHALL BE INSTALLED IN ACCORDANCE WITH THE MANUFACTURER'S RECOMMENDATIONS. PROVIDE WASHERS UNDER THE HEADS AND NUTS OF ALL BOLTS AND LAG SCREWS BEARING ON WOOD.

36. WOOD FRAMING NOTES-- THE FOLLOWING APPLY UNLESS OTHERWISE SHOWN ON THE PLANS:

A. ALL WOOD FRAMING DETAILS NOT SHOWN OTHERWISE SHALL BE CONSTRUCTED TO THE MINIMUM STANDARDS OF THE INTERNATIONAL BUILDING CODE. MINIMUM NAILING, UNLESS OTHERWISE NOTED, SHALL CONFORM TO TABLE 2304.10.1 OF THE INTERNATIONAL BUILDING CODE. UNLESS NOTED OTHERWISE, ALL NAILS SHALL BE COMMON. COORDINATE THE SIZE AND LOCATION OF ALL OPENINGS WITH MECHANICAL AND ARCHITECTURAL DRAWINGS. PROVIDE WASHERS UNDER THE HEADS AND NUTS OF ALL BOLTS AND LAG SCREWS BEARING ON WOOD.

B. WALL FRAMING: ALL STUD WALLS SHOWN AND NOT OTHERWISE NOTED SHALL BE 2 X 4 STUDS @ 16" O.C. AT INTERIOR WALLS AND 2 X 6 @ 16" O.C. AT EXTERIOR WALLS. TWO STUDS MINIMUM SHALL BE PROVIDED AT THE END OF ALL WALLS AND AT EACH SIDE OF ALL OPENINGS. TWO 2 X 8 HEADERS SHALL BE PROVIDED OVER ALL OPENINGS NOT OTHERWISE NOTED. SOLID BLOCKING FOR WOOD COLUMNS SHALL BE PROVIDED THROUGH FLOORS TO SUPPORTS BELOW. PROVIDE CONTINUOUS SOLID BLOCKING AT MID-HEIGHT OF ALL STUD WALLS LESS THAN OR EQUAL TO 8' IN HEIGHT. FOR HEIGHTS ≥8', PROVIDE CONTINUOUS SOLID BLOCKING AT 4'-0" OC.

ALL STUD WALLS ATTACHED TO CONCRETE FOUNDATION WALLS SHALL HAVE THEIR LOWER WOOD PLATES BOLTED WITH 5/8" DIAMETER ANCHOR BOLTS @ 6'-0" O.C. WITH 3" X 3" X 1/4" SQUARE WASHERS OR 3" DIAMETER ROUND WASHERS UNLESS OTHERWISE NOTED. LAYOUT OF WALL PLATES, STUDS, AND ANCHORS SHALL CONFORM TO THE REQUIREMENTS OF SECTION 2308.6 OF THE 2012 IBC. ALL SILL PLATE PIECES SHALL HAVE A MINIMUM OF TWO ANCHOR BOLTS EMBEDDED INTO CONCRETE, WITH THE FIRST ANCHOR BOLT LOCATED NOT MORE THAN 12" FROM THE END OF THE PLATE, AND NO CLOSER THAN 4" TO THE END.ALL STUD WALLS SHALL HAVE THEIR LOWER WOOD PLATES ATTACHED TO WOOD FRAMING BELOW WITH 16D NAILS AT 12" O.C. STAGGERED. UNLESS INDICATED OTHERWISE. INDIVIDUAL MEMBERS OF BUILT-UP POSTS SHALL BE NAILED TO EACH OTHER WITH 16D @ 12" O.C. STAGGERED. REFER TO THE PLANS AND SHEAR WALL SCHEDULE FOR REQUIRED SHEATHING AND NAILING. WHEN NOT OTHERWISE NOTED, PROVIDE GYPSUM WALLBOARD ON INTERIOR SURFACES AND GYPSUM SHEATHING ON EXTERIOR SURFACES NAILED TO ALL STUDS, TOP AND BOTTOM PLATES AND BLOCKING WITH NAILS AT 7" O.C. USE 5D COOLER NAILS FOR 1/2" GWB AND 6D COOLER NAILS FOR 5/8" GWB. USE #11 GAUGE, 1-3/4" LONG, 7/16" HEAD, DIAMOND POINT, GALVANIZED NAILS FOR EXTERIOR SHEATHING.

C. FLOOR AND ROOF FRAMING: PROVIDE DOUBLE JOISTS UNDER ALL PARALLEL PARTITIONS THAT EXTEND MORE THAN ONE-HALF OF THE JOIST LENGTH AND AROUND ALL OPENINGS IN FLOORS OR ROOFS UNLESS OTHERWISE NOTED. PROVIDE BRIDGING @ 8' O.C. AND SOLID BLOCKING AT ALL BEARING POINTS. COORDINATE THE SIZE AND LOCATION OF ALL OPENINGS WITH ARCHITECTURAL AND MECHANICAL DRAWINGS.

TOENAIL JOISTS TO SUPPORTS WITH TWO 16D NAILS. ATTACH TIMBER JOISTS TO FLUSH HEADERS OR BEAMS WITH SIMPSON METAL JOIST HANGERS IN ACCORDANCE WITH NOTES ABOVE. NAIL ALL MULTI-JOIST BEAMS TOGETHER WITH 16D @ 12" O.C. STAGGERED.

UNLESS OTHERWISE NOTED ON THE PLANS, PLYWOOD ROOF AND FLOOR SHEATHING SHALL BE LAID UP WITH GRAIN PERPENDICULAR TO SUPPORTS AND NAILED WITH 8D NAILS @ 6" O.C. TO FRAMED PANEL EDGES AND OVER STUD WALLS AS SHOWN ON PLANS AND @ 12" O.C. (10" O.C. AT FLOORS) TO INTERMEDIATE SUPPORTS. PROVIDE APPROVED PLYWOOD EDGE CLIPS CENTERED BETWEEN ROOF JOISTS/TRUSSES AT UNBLOCKED ROOF SHEATHING EDGES OR PROVIDE SOLID BLOCKING. AT BLOCKED FLOOR AND ROOF DIAPHRAGMS, INSTALL FLAT 2X BLOCKING AT ALL UNFRAMED PANEL EDGES AND NAIL WITH EDGE NAILING SPECIFIED. TOENAIL BLOCKING TO PLATE WITH 16D @ 12" O.C. OR (2) 16D EACH END AT SUPPORTS UNLESS OTHERWISE NOTED. AT UNBLOCKED DIAPHRAGMS, ALL FLOOR SHEATHING EDGES SHALL HAVE APPROVED TONGUE-AND-GROOVE JOINTS AT UNBLOCKED EDGES OR SHALL BE SUPPORTED WITH SOLID BLOCKING.

D. NAILING: MINIMUM NAIL DIAMETER AND LENGTH SHALL BE AS FOLLOWS:

	NAIL SIZE ON DRAWINGS OR DETAILS	DIAMETER AND LENGTH
SHEATHING NAILS	8D	Ø.131" X 2 ¼"
	10D	Ø.148" X 2 ½"
FRAMING NAILS	8D	Ø.131" X 2 ½"
	10D	Ø.148" X 3"
	16D	Ø.161" X 3 ½"

ILG
I.L. GROSS
STRUCTURAL ENGINEERS
23914 56th Avenue W. ~ Suite 200
Mountlake Terrace, WA 98043-5263
Ph: (206) 623-0769, (425) 640-7333
www.ilgross.com

MARK T. SPEIDEL — STATE OF WASHINGTON — 43713 — STRUCTURAL ENGINEER — PROFESSIONAL ENGINEER
07/2023

SAFFOLD ADU
514 WASHINGTON AVE
MUKILTEO WA 98275

REVISIONS

NO	DATE	DESCRIPTION

TITLE

GENERAL STRUCTURAL NOTES

DESIGNED	RLM
DRAWN	KMH
CHECKED	RLM
DATE	07/10/2023
JOB NUMBER	

SHEET NO.

S1.0

SDCI REVIEW

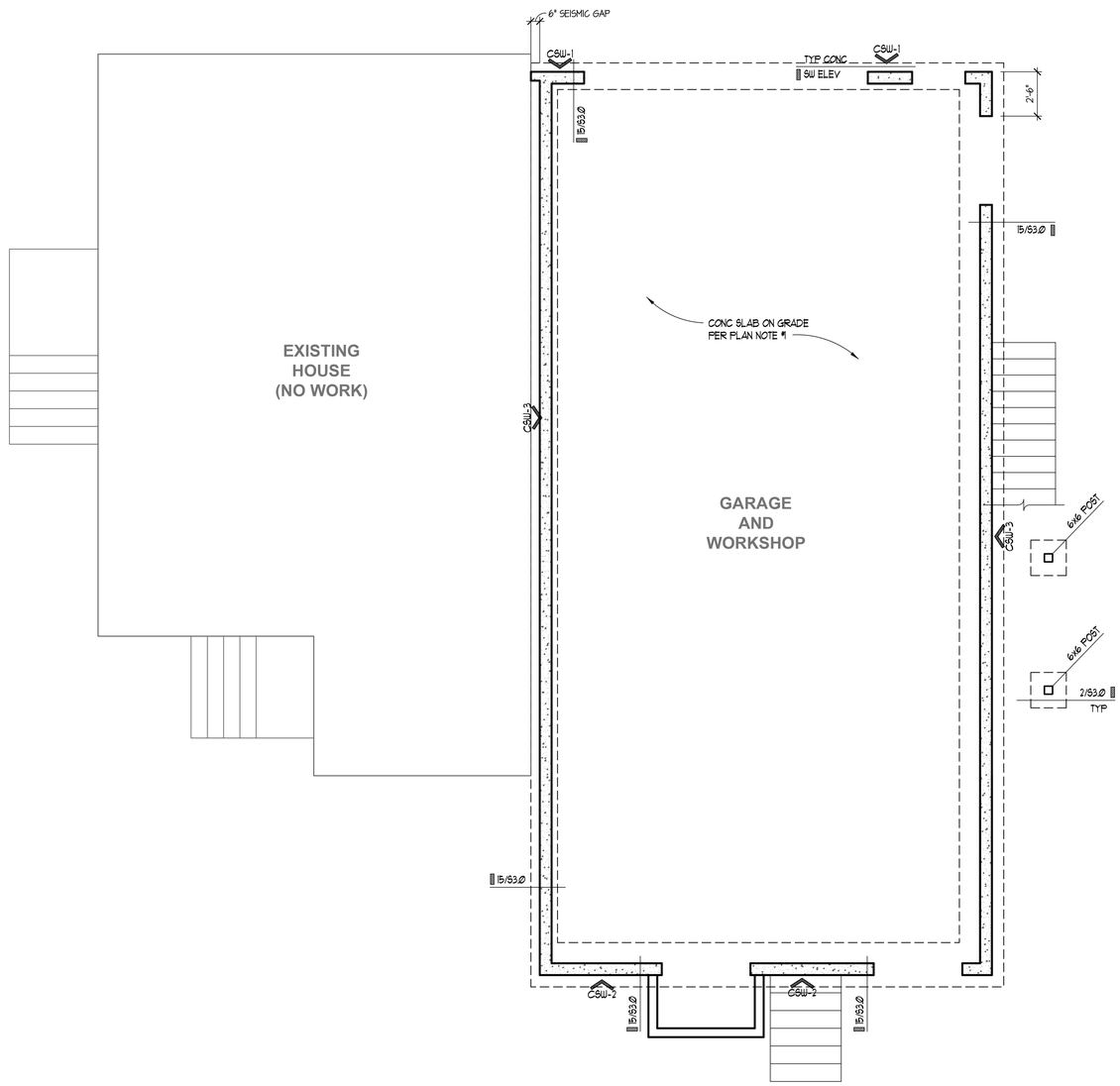

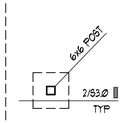

PLAN NOTES

1. PROVIDE NEW 4" CONCRETE SLAB ON GRADE w/ 6x6 - W2.1 x 2.1 WWM, U.O.N.
2. INDICATES CONCRETE WALL AND FOOTING
3. INDICATES NEW POST AND PAD FOOTING. SEE 2/S3.0
4. INDICATES SHEAR WALL ABOVE. SEE 10/S4.0
5. SEE DETAIL 17/S3.0 FOR HOLDOWN ANCHOR BOLTS
6. SEE DETAIL 12/S3.0 FOR TYP ANCHOR BOLT EMBEDMENT
7. SEE SHEET S3.0 FOR TYPICAL CONCRETE DETAILS
8. SEE SHEET S3.1 FOR TYPICAL CONCRETE SHEAR WALL DETAILS

1 GARAGE & FOUNDATION PLAN

SCALE: 1/4" = 1'-0"

0 4' 8'

I.L. GROSS
STRUCTURAL
ENGINEERS

23914 56th Avenue W. ~ Suite 200
Mountlake Terrace, WA 98043-5263
Ph: (206) 623-0769, (425) 640-7333
www.ilgross.com

MARK T. SPEDDING
STATE OF WASHINGTON
43913
STRUCTURAL ENGINEER
PROFESSIONAL ENGINEER
07/2023

SAFFOLD ADU

514 WASHINGTON AVE
MUKILTEO WA 98275

REVISIONS

NO.	DATE	DESCRIPTION

TITLE

GARAGE & FOUNDATION PLAN

DESIGNED	RLM
DRAWN	KSH
CHECKED	RLM
DATE	07/10/2023
JOB NUMBER	

SHEET NO.

S2.0

SDCI REVIEW

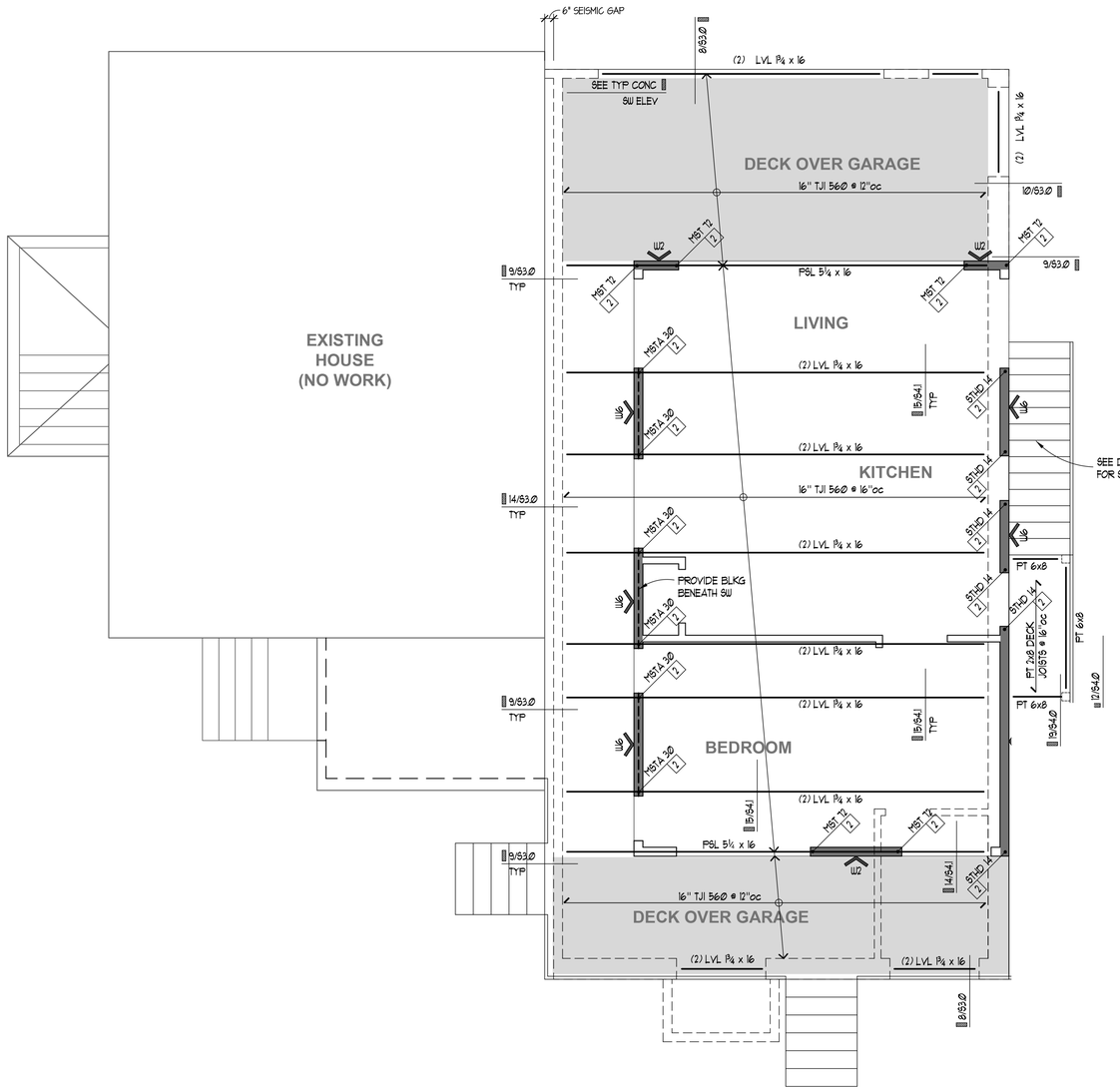

PLAN NOTES

1. NEW FLOOR DIAPHRAGM SHALL BE 3/4" CDX PLYWOOD WITH MIN. PANEL INDEX OF 32/16, NAILED WITH 0.148 x 3" NAILS AT :
   6"oc AT ALL DIAPHRAGM BOUNDARIES AND SHEAR WALLS
   6"oc AT ALL PANEL EDGES (BLOCKING REQUIRED)
   12"oc AT FIELD

   2.5"oc AT ALL DIAPHRAGM BOUNDARIES AND SHEAR WALLS
   4"oc AT ALL PANEL EDGES (BLOCKING REQUIRED)
   12"oc AT FIELD

   PROVIDE MINIMUM 3x4 BLOCKING AT ALL PANEL EDGES

2. INDICATES SHEAR WALL PER SHEAR WALL SCHEDULE 10/640
3. INDICATES SIMPSON HOLDOWN OR OTHER REQUIREMENT PER PLAN
   INDICATES THE NUMBER OF END STUDS OR BEARING STUDS REQUIRED AT END OF WALL. PROVIDE MIN (2) BEARING STUDS BELOW ALL BEAMS AND HEADERS, AND TWO FULL HEIGHT STUDS AT END OF ALL SHEAR WALLS
4. INDICATES SPAN DIRECTION AND EXTENT OF FLOOR JOISTS. PER PLAN. PROVIDE 16" TJI 560 @ 16"oc JOISTS U.O.N.
5. INDICATES BEAM OR HEADER PER PLAN. PROVIDE MIN. w/ L5L 1½ x 16 TYP AT FLOORS
   PROVIDE MIN (2) END STUDS TO SUPPORT NEW BEAMS AND HEADERS
6. SEE SHEET 540 FOR TYPICAL WOOD FRAMING DETAILS
7. INDICATES WALL BELOW
8. SEE 20/640 FOR TYPICAL HANGER SCHEDULE
9. CONTRACTOR SHALL NOT DRILL THRU SHEAR WALL END STUDS OR BEAM SUPPORTS FOR MECHANICAL PENETRATIONS.

1 UPPER ADU FLOOR PLAN

SCALE: 1/4" = 1'-0"

0 4' 8'

I.L. GROSS
STRUCTURAL ENGINEERS

23914 56th Avenue W. ~ Suite 200
Mountlake Terrace, WA 98043-5263
Ph: (206) 623-0769, (425) 640-7333
www.ilgross.com

MARK T. SPEDDING
STATE OF WASHINGTON
43913
STRUCTURAL ENGINEER
PROFESSIONAL ENGINEER
07/10/2023

SAFFOLD ADU

514 WASHINGTON AVE
MUKILTEO WA 98275

REVISIONS

NO.	DATE	DESCRIPTION

TITLE

UPPER ADU
FLOOR PLAN

DESIGNED	RLM
DRAWN	KSH
CHECKED	RLM
DATE	07/10/2023
JOB NUMBER	

SHEET NO.

S2.1

SDCI REVIEW

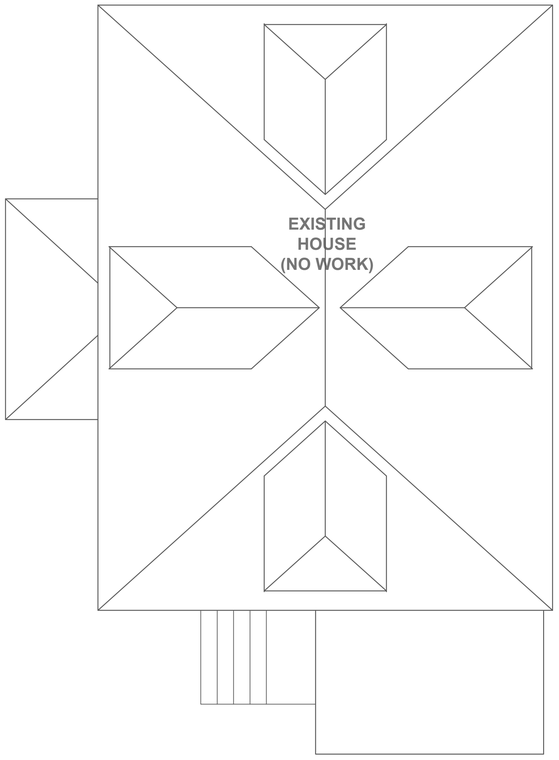

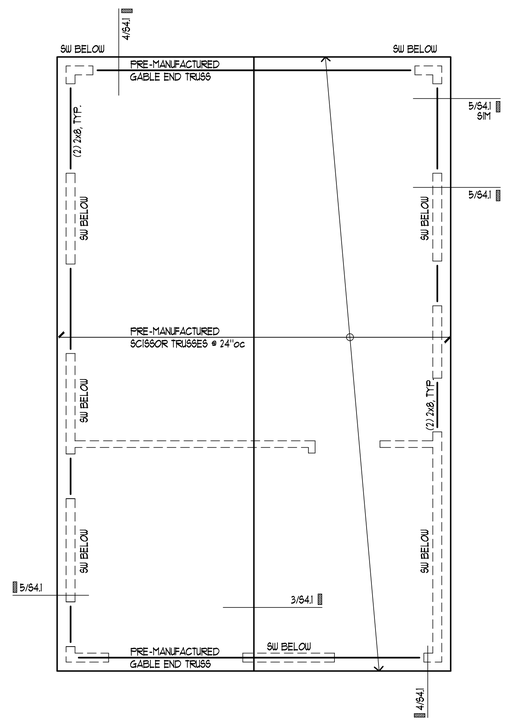

PLAN NOTES

1. NEW ROOF DIAPHRAGM SHALL BE 1/2" CDX PLYWOOD w/ MIN. PANEL INDEX OF 24/0, WITH 0131" x 2.5" NAILS AT :
   6"oc AT ALL DIAPHRAGM BOUNDARIES AND SHEAR WALLS
   6"oc AT ALL SUPPORTED PANEL EDGES (UNBLOCKED)
   12"oc AT FIELD
2. INDICATES WALL BELOW. SEE S2.2 & 10/S4.0 FOR SHEAR WALL LOCATIONS
3. INDICATES BEAM OR HEADER PER PLAN. PROVIDE MIN. (2) 2x8 AT ROOF. PROVIDE MIN (2) END STUDS TO SUPPORT NEW BEAMS AND HEADERS
4. INDICATES FRAMING DIRECTION AND EXTENTS. PROVIDE PREMANUFACTURED SCISSOR TRUSSES @ 24"oc
5. SEE 4.0 FOR TYPICAL WOOD FRAMING DETAILS

1 ROOF FRAMING PLAN

SCALE: 1/4" = 1'-0"

0 4' 8'

I.L. GROSS
STRUCTURAL
ENGINEERS

23914 56th Avenue W. ~ Suite 200
Mountlake Terrace, WA 98043-5263
Ph: (206) 623-0769, (425) 640-7333
www.ilgross.com

07/2023

SAFFOLD ADU

514 WASHINGTON AVE
MUKILTEO WA 98275

REVISIONS

NO.	DATE	DESCRIPTION

TITLE

ROOF
FRAMING PLAN

DESIGNED	RLM
DRAWN	KMH
CHECKED	RLM
DATE	07/10/2023
JOB NUMBER	

SHEET NO.

S2.2

SDCI REVIEW

REINFORCING SPLICE AND DEVELOPMENT LENGTH SCHEDULE

(For Grade 60, Uncoated Bars, Normal Weight Concrete)

I — MINIMUM STRAIGHT DEVELOPMENT LENGTH (ℓ_d) ✳

f 'c = 3000 PSI

BAR SIZE	TOP BARS	OTHER BARS
# 3	22"	17"
# 4	29"	22"
# 5	37"	28"
# 6	44"	33"

✳ "TOP BARS" ARE HORIZONTAL BARS WITH MORE THAN 12" DEPTH OF CONCRETE CAST BELOW THEM.
IF CLEAR CONCRETE COVER IS NOT GREATER THAN THE DIAMETER OF THE BAR OR THE CENTER TO CENTER SPACING IS NOT GREATER THAN 3 BAR DIAMETERS, THEN VALUES SHALL BE INCREASED BY 43%.

II — MINIMUM LAP SPLICE LENGTHS (ℓ_s) ✳

f 'c = 3000 PSI

BAR SIZE	TOP BARS	OTHER BARS
# 3	29"	21"
# 4	38"	27"
# 5	48"	34"
# 6	58"	41"

SPLICES IN HORIZONTAL REINFORCING SHALL NOT OCCUR IN BOTH CURTAINS OF REINFORCING AT THE SAME LOCATION.

III — MINIMUM EMBEDMENT LENGTHS (ℓ_{dh}) FOR STANDARD END HOOKS

A. for general uses:

BAR SIZE	f 'c = 3000 PSI
# 3	7"
# 4	9"
# 5	11"
# 6	13"

1. SIDE COVER MUST BE EQUAL TO OR GREATER THAN 2½".
2. END COVER FOR 90° HOOKS MUST BE EQUAL TO OR GREATER THAN 2".
3. 90° HOOKS ONLY

6

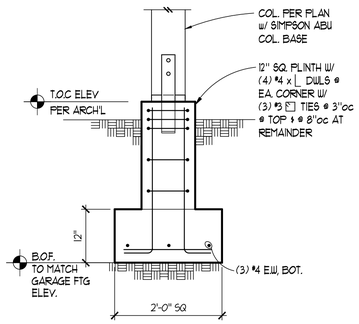

PAD FOOTING AT EXTERIOR POST 2

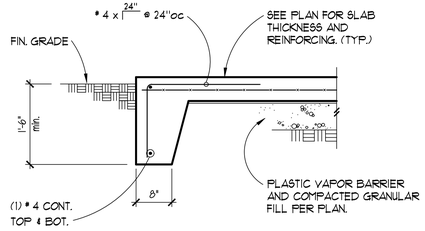

TYPICAL TURNED DOWN SLAB EDGE 3

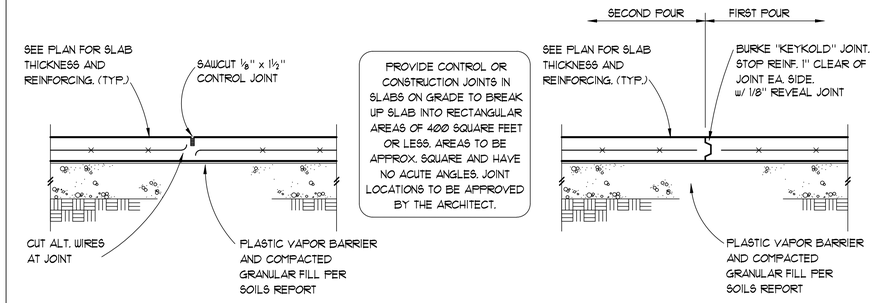

TYPICAL SLAB ON GRADE JOINTS 5

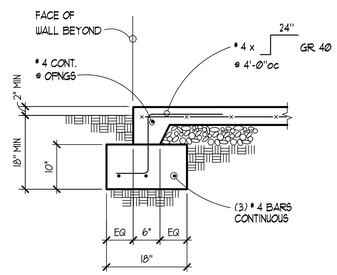

GARAGE FLOOR SLAB AT FOOTING 7

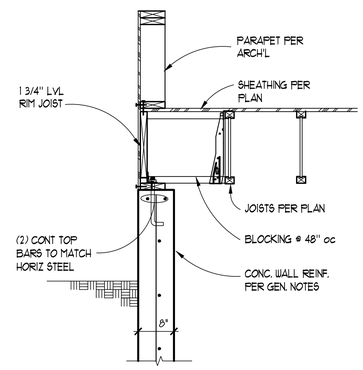

8

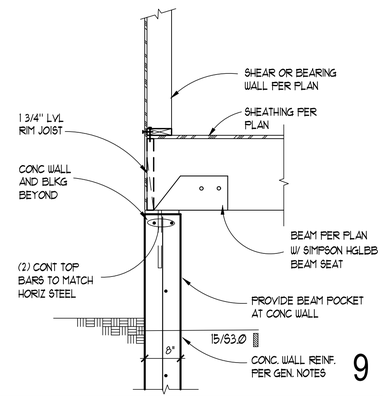

9

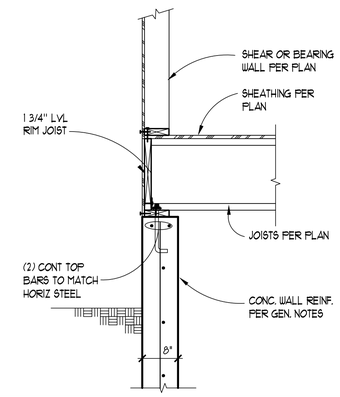

10

HOLDOWN ANCHOR SCHEDULE

CALLOUT	A.B. SIZE	CAPACITY (Kips)
HDU2	⅝"ø A.B.	2.62
HDU4	⅝"ø A.B.	4.19
HDU5	⅝"ø A.B.	5.43
HDU8	⅞"ø A.B	8.35
HDU11	1"ø A.B	11.27

HOLDOWNS SPECIFIED ON PLANS ARE MANUFACTURED BY SIMPSON STRONG TIE, INC. UNLESS OTHERWISE NOTED. CAPACITIES ARE BASED ON THE MOST RECENT CATALOGUE AND ICC REPORTS FOR THE MODELS LISTED.

ALTERNATE HOLDOWN ANCHORS MAY BE SUBSTITUTED AT THE CONTRACTOR OR OWNER'S OPTION, PROVIDED THEY ARE APPROVED BY THE ENGINEER OF RECORD AND HAVE A CURRENT ICC REPORT STATING THEIR CAPACITY MEETS OR EXCEEDS THE DESIGN CAPACITY LISTED ABOVE.

DESIGN CAPACITIES ARE BASED ON Douglas Fir FRAMING LUMBER AS STATED IN TEH GENERAL STRUCTURAL NOTES. SUBSTITUTING ALTERNATE LUMBER GRADES MAY CAUSE HOLDOWNS AND THEIR CONNECTIONS TO FAIL AT LOWER CAPACITIES THAN THOSE DESIGNED FOR.

HOLDOWN ANCHOR SCHEDULE 11

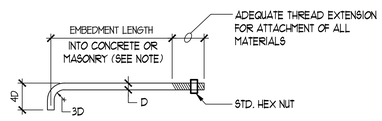

BOLT DIA. 'D'	MINIMUM EMBEDMENT	
	ANCHOR BOLTS IN HORIZ. SURFACE	ANCHOR BOLTS IN VERT. SURFACE
½"	5"	7"
⅝"	5"	7"
¾"	5"	7"

NOTE: ANCHOR BOLT EMBEDMENT IN VERTICAL SURFACE APPLIES TO CONCRETE ONLY.

TYP. ANCHOR BOLT 12

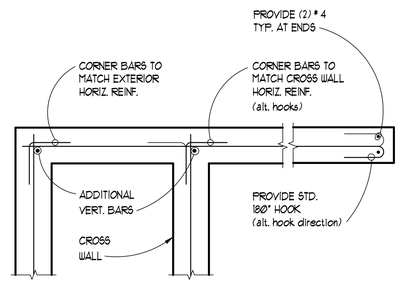

TYPICAL CORNER AND END BAR ARRANGEMENT AT CONCRETE WALLS 13

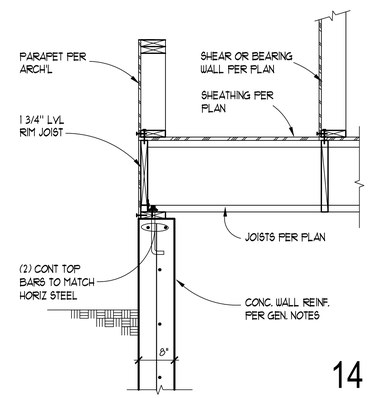

14

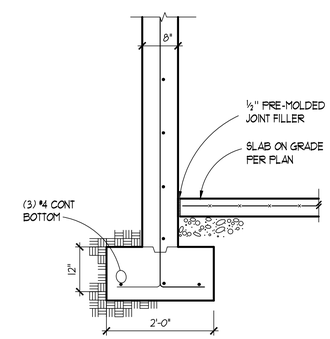

15

ANCHOR BOT DIA. 'D' (CAP.)	MINIMUM EMBEDMENT DEPTH (Le)		
	INTO 6" STEM	INTO 8" STEM	INTO MIN. 16" WIDE FTG.
5/8" (5.6k)	14"	12"	9"
3/4" (7.7k)	20"	14"	9"
7/8" (10.1k)	N/A	24"	11"
1" (14.1k)	N/A	N/A	15"
1 1/8" (20.7k)	N/A	N/A	20"

HOLDOWN EMBEDMENTS LISTED ARE BASED ON THE ALLOWABLE CAPACITIES DEVELOPED IN CONCRETE WALLS WITH TYPICAL REINFORCING SPACED NOT MORE THAN 18" ON CENTER.

ANCHOR CAPACITIES SHOWN ARE FOR HEAVY HEX HEAD TYPE BOLTS CONFORMING TO ASTM F1554, GRADE A36 OR A307. ALTERNATE ANCHORTYPES MAY BE ALLOWED, BUT MAY REQUIRE EMBEDMENTS GREATER THAN THOSE SHOWN. PRE-ENGINEERED ANCHORS SUCH AS 'SSTB' AND 'PAB' ANCHORS MANUFACTURED BY SIMPSON STRONG TIE, ARE ALLOWED PROVIDED THEY HAVE CURRENT ICC REPORTS FOR CAPACITIES GREATER THAN OR EQUAL TO THOSE LISTED. PRE-ENGINEERED ANCHORS SHOULD BE INSTALLED IN ACCORDANCE WITH THE MANUFACTURER'S REQUIREMENTS.

HOLDOWN ANCHOR BOLT EMBEDMENT SCHEDULE

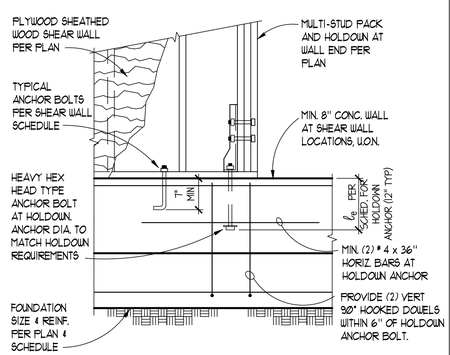

HOLDOWN EMBEDMENTS 17

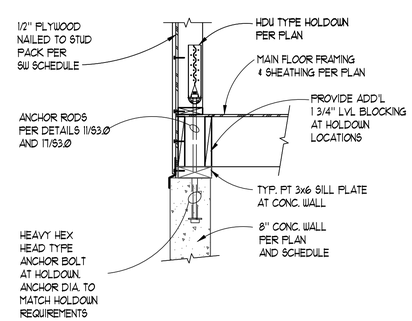

HOLDOWN ANCHOR DETAIL 18

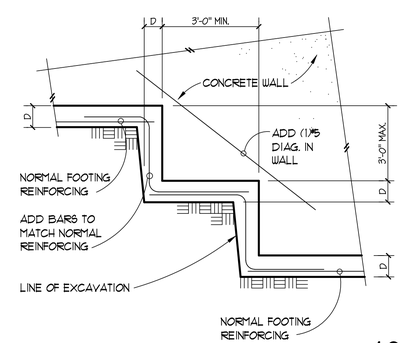

TYPICAL STEPPED FOOTING 19

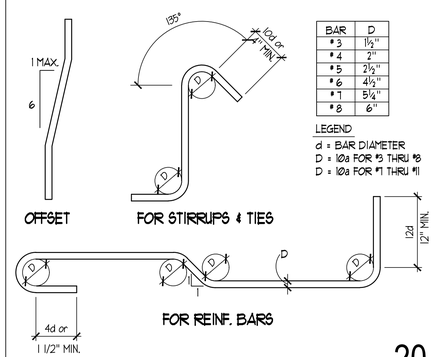

BAR	D
# 3	1½"
# 4	2"
# 5	2½"
# 6	4½"
# 7	5¼"
# 8	6"

LEGEND
d = BAR DIAMETER
D = 10d FOR #3 THRU #8
D = 10d FOR #7 THRU #11

REBAR BENDING SCHEDULE 20

I.L. GROSS STRUCTURAL ENGINEERS
23914 56th Avenue W. ~ Suite 200
Mountlake Terrace, WA 98043-5263
Ph: (206) 623-0769, (425) 640-7333
www.ilgross.com

MARK T. SPEIDER — STATE OF WASHINGTON — 53713 — STRUCTURAL ENGINEER — PROFESSIONAL ENGINEER
07/2023

SAFFOLD ADU
514 WASHINGTON AVE
MUKILTEO WA 98275

REVISIONS

NO	DATE	DESCRIPTION

TITLE
TYPICAL CONCRETE DETAILS

DESIGNED	RLM
DRAWN	KMH
CHECKED	RLM
DATE	07/10/2023
JOB NUMBER	

SHEET NO.
S3.0

SDCI REVIEW

REINFORCING SPLICE AND DEVELOPMENT LENGTH SCHEDULE

(For Grade 60, Uncoated Bars, Normal Weight Concrete)

I — MINIMUM STRAIGHT DEVELOPMENT LENGTH (ℓ_d) ✳

f 'c = 3000 PSI

BAR SIZE	TOP BARS	OTHER BARS
# 3	22"	17"
# 4	29"	22"
# 5	37"	28"
# 6	44"	33"

✳ "TOP BARS" ARE HORIZONTAL BARS WITH MORE THAN 12" DEPTH OF CONCRETE CAST BELOW THEM.
IF CLEAR CONCRETE COVER IS NOT GREATER THAN THE DIAMETER OF THE BAR OR THE CENTER TO CENTER SPACING IS NOT GREATER THAN 3 BAR DIAMETERS, THEN VALUES SHALL BE INCREASED BY 43%.

II — MINIMUM LAP SPLICE LENGTHS (ℓ_s) ✳

f 'c = 3000 PSI

BAR SIZE	TOP BARS	OTHER BARS
# 3	29"	21"
# 4	38"	27"
# 5	48"	34"
# 6	58"	41"

SPLICES IN HORIZONTAL REINFORCING SHALL NOT OCCUR IN BOTH CURTAINS OF REINFORCING AT THE SAME LOCATION.

III — MINIMUM EMBEDMENT LENGTHS (ℓ_{dh}) FOR STANDARD END HOOKS

A. for general uses:

BAR SIZE	f 'c = 3000 PSI
# 3	7"
# 4	9"
# 5	11"
# 6	13"

1. SIDE COVER MUST BE EQUAL TO OR GREATER THAN 2½".
2. END COVER FOR 90° HOOKS MUST BE EQUAL TO OR GREATER THAN 2".
3. 90° HOOKS ONLY

6

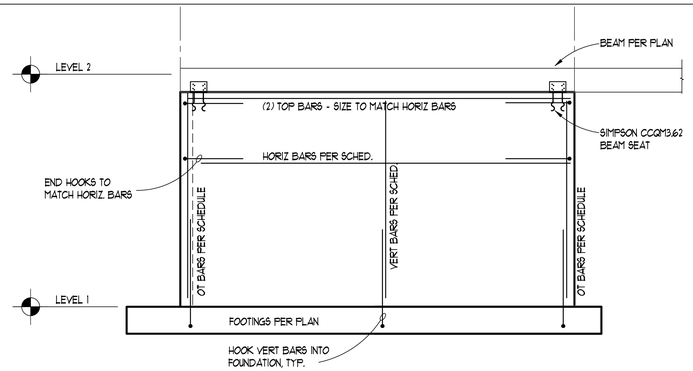

TYPICAL CONCRETE SHEAR WALL ELEVATION SCALE: 1/4" = 1'-0"

3

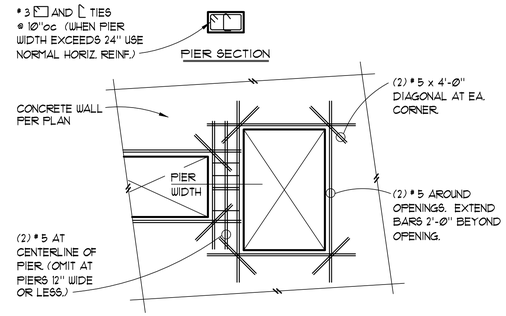

TYPICAL OPENING REINFORCING AT CONCRETE WALLS

5

NOTE:

1. REINFORCING SHOWN IS MINIMUM. SEE PLANS AND WALL ELEVATIONS FOR ANY ADDITIONAL REQUIRED REINFORCING.
2. PROVIDE FOR ANY OPENING SIX SQUARE FEET OR LARGER UNLESS OTHERWISE NOTED ON PLANS, ELEVATIONS, OR DETAILS.
3. FOR WALLS THICKER THAN 8" USE # 6 BARS IN LIEU OF # 5 BARS SHOWN.

SHEAR WALL NOTES:

1. WALL THICKNESS PER ELEVATION OR SCHEDULE WHERE OCCURS
2. SEE GENERAL STRUCTURAL NOTES FOR TYPICAL CONCRETE COVER REQUIREMENTS.
3. REBAR DETAILING: ALL SHEAR WALL REINFORCING SHALL BE DEVELOPED AND SPLICED FOR FULL TENSION CAPACITY PER SCHEDULE 20/S300. EMBED FOOTING DOWELS PER TABLE I WHERE DEPTH AVAILABLE (HOOK PER TABLE IV OTHERWISE). SPLICE ALL BARS PER TABLES II AND III OF 6/S300.
4. TIES SHALL OCCUR PER DETAILS IN ALL WALL ELEMENTS WHERE SHADING IS SHOWN. PROVIDE #3 CLOSED TIES AT 4" oc U.O.N.
5. SEE S100 AND S300 FOR TYPICAL CONCRETE COVER REQUIREMENTS.

7

CONCRETE SHEAR WALL SCHEDULE

CONC. SW No.	THICKNESS	2-1 REINFORCING		
		VERT	HORIZ	OT
CSW-1	8"	#5 @ 12"oc	#5 @ 12"oc	(4) #5
CSW-2	8"	#5 @ 12"oc	#5 @ 12"oc	(4) #5
CSW-3	8"	#5 @ 16"oc	#5 @ 16"oc	(2) #5

NOTE: 1) OT = OVERTURNING VERTICAL BARS AT THE END OF THE WALL. SEE 13/S5.1 FOR LAYOUT OF OT REINFORCING

8

9

10

11

12

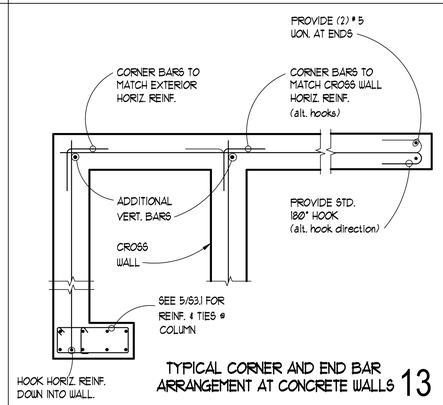

TYPICAL CORNER AND END BAR ARRANGEMENT AT CONCRETE WALLS

13

14

15

16

17

18

19

20

I.L. GROSS STRUCTURAL ENGINEERS
23914 56th Avenue W. ~ Suite 200
Mountlake Terrace, WA 98043-5263
Ph: (206) 623-0769, (425) 640-7333
www.ilgross.com

MARK T. SPEIDEL — STATE OF WASHINGTON — 53713 — STRUCTURAL ENGINEER — PROFESSIONAL ENGINEER

07/2023

SAFFOLD ADU

514 WASHINGTON AVE
MUKILTEO WA 98275

REVISIONS

NO	DATE	DESCRIPTION

TITLE

TYPICAL CONCRETE DETAILS

DESIGNED	RLM
DRAWN	KMH
CHECKED	RLM
DATE	07/10/2023
JOB NUMBER	

SHEET NO.

S3.1

SDCI REVIEW

STUD TO STUD NAILING SCHEDULE

LEVEL	NAILING TYPE	
	TYPE 1	TYPE 2
SECOND	16d @ 12"o.c.	16d @ 6"o.c.
FIRST	16d @ 12"o.c.	16d @ 6"o.c.

NOTES:

1. WHERE NO STUD TO STUD NAILING IS INDICATED, NAIL STUDS TOGETHER WITH 16d @ 12"o.c. .
2. ADDITIONAL STUDS REQUIRED AS NAILERS, ETC. ARE NOT SHOWN.
3. SEE SHEAR WALL SCHEDULE FOR SHEATHING NAILING REQUIREMENTS.
4. SEE PLAN NOTES FOR STUD SIZE AND SPACING. (VERIFY WITH ARCHITECTURAL)

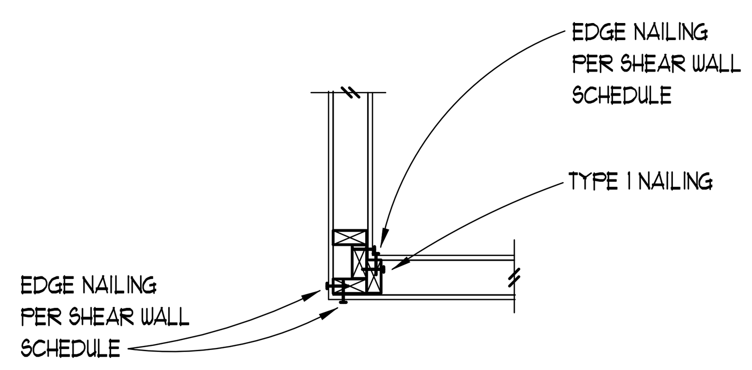

INTERIOR WALL CORNER

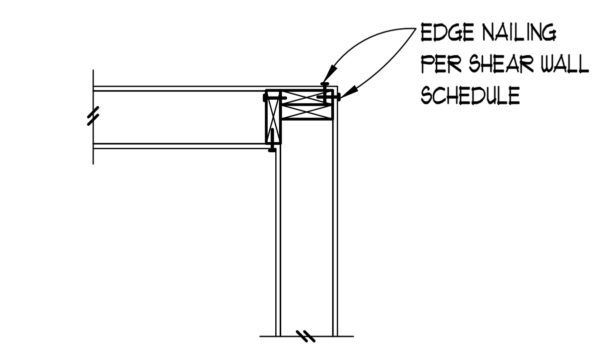

TYPICAL WALL CORNER

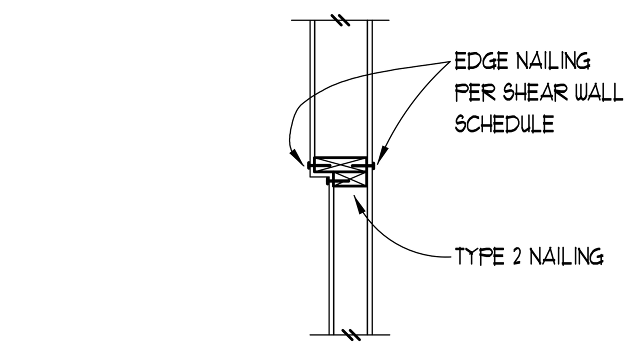

VARYING WALL SIZE

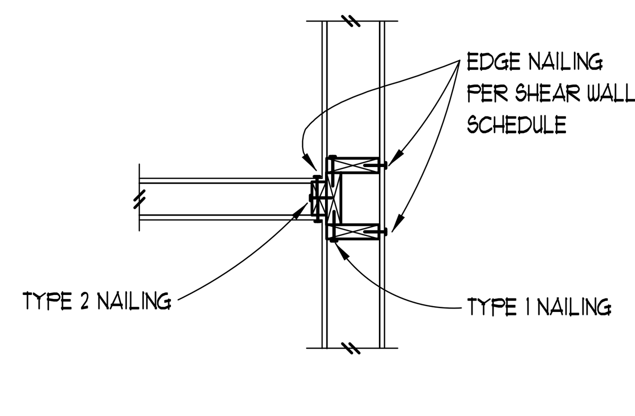

INTERIOR WALL TO EXTERIOR WALL

7

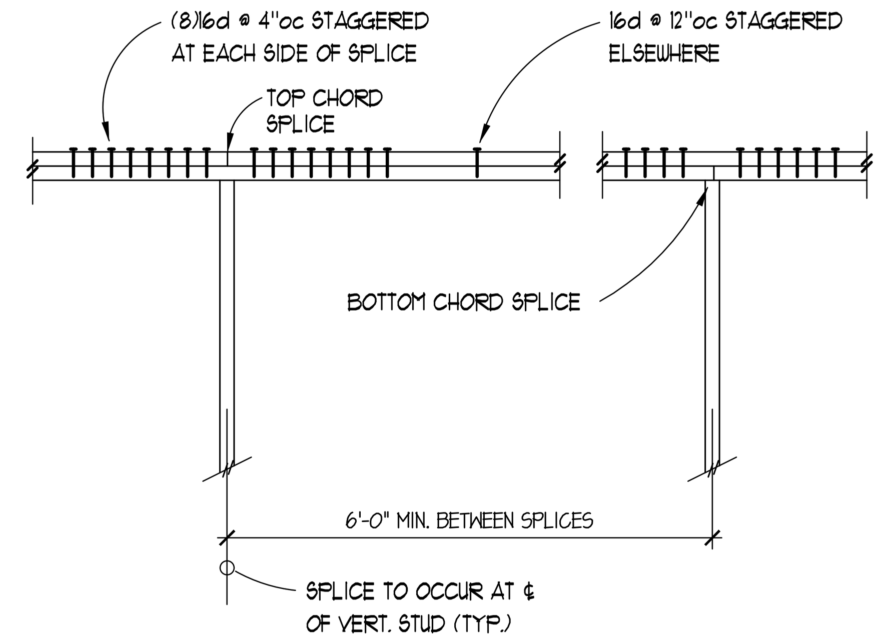

TYPICAL TOP PLATE SPLICE 3

SECTION VIEW

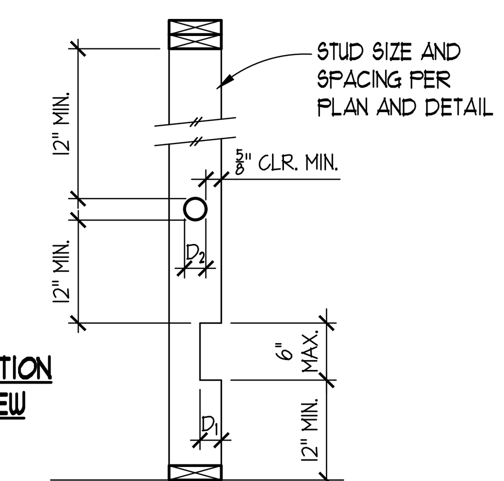

BEARING WALLS		
STUD SIZE	MAX. D_1 (NOTCH)	MAX. D_2 (NOTCH)
2x4 & 3x4	3/4"	1 1/4"
2x6	1 1/4"	2 1/4"
2x8	1 3/4"	3"

NON-BEARING WALLS		
STUD SIZE	MAX. D_1 (NOTCH)	MAX. D_2 (NOTCH)
2x4 & 3x4	1 1/4"	2"
2x6	2 1/4"	3 1/4"
2x8	3"	4 1/4"

NOTE: HOLE AND NOTCH SIZE FOR NON-BEARING WALLS MAY BE USED FOR BEARING WALLS IF REQUIRED NUMBER OF STUDS ARE DOUBLED. THIS MAY ONLY BE USED AT TWO CONSECUTIVE STUDS IN ANY ONE WALL.

ALLOWABLE HOLES & NOTCHES IN STUDS 8

SHEAR WALL SCHEDULE

LABEL	APA RATED SHEATHING (1) (2) (4) (13) (14)	NAIL SIZE & SPACING @ EDGES (4) (5) (17)	STUD & BLOCKING SIZE AT ADJOINING EDGES (3) (6) (15)	RIM JOIST OR BLOCK CONNECTION TO TOP PLATE (7) (8) (9)	2 X BOTTOM PLATE ATTACHMENT NAILING TO WOOD BELOW (10)	SILL PLATE ATTACHMENT (11) ANCHOR BOLT TO CONCRETE BELOW (11) (16)	PLF CAPACITY (ASD)
W6	15/32" ONE SIDE	Ø.148 x 3" @ 6"oc	2X	CLIP @ 20" oc	Ø.148 x 3¼" @ 6"oc	5/8" ϕ @ 48"oc	310
W4	15/32" ONE SIDE	Ø.148 x 3" @ 4"oc	3X	CLIP @ 12" oc	Ø.148 x 3¼" @ 4" oc	5/8" ϕ @ 40"oc	460
W3	15/32" ONE SIDE	Ø.148 x 3" @ 3"oc	3X	CLIP @ 10" oc	Ø.148 x 3¼" @ 3"oc	5/8" ϕ @ 32"oc	600
W2	15/32" ONE SIDE	Ø.148 x 3" @ 2"oc	3X	CLIP @ 8" oc	Ø.148 x 3¼" @ 2½"oc	5/8" ϕ @ 24"oc	769
2W4 (2)	15/32" TWO SIDES	Ø.148 x 3" @ 4"oc	3X	CLIP @ 6" oc	(2) Ø.148 x 3¼" @ 3"oc	5/8" ϕ @ 20"oc	921
2W3 (2)	15/32" TWO SIDES	Ø.148 x 3" @ 3"oc	3X	A35 CLIP @ 6"oc	(2) Ø.148 x 3¼" @ 3"oc	5/8" ϕ @ 16"oc	1200
2W2 (2)	15/32" TWO SIDES	Ø.148 x 3" @ 2"oc	3X	HSLQ37-SDS2.5 @ 10"oc	(2) Ø.148x3¼" @ 2½"oc	5/8" ϕ @ 12"oc	1539

NOTES:

(1) INSTALL PANELS EITHER HORIZONTALLY OR VERTICALLY. INSTALL PANELS DIRECTLY TO WALL STUDS. WHERE EDGE NAIL SPACING IS LESS THAN 6"oc, STAGGER ADJOINING PANEL EDGE NAILS

(2) WHERE SHEATHING IS APPLIED ON BOTH SIDES OF WALL, PANEL EDGE JOINTS ON 2x OR 3x FRAMING SHALL BE STAGGERED SO THAT JOINTS ON THE OPPOSITE SIDES ARE NOT LOCATED ON THE SAME STUDS.

(3) BLOCKING IS REQUIRED AT ALL PANEL EDGES

(4) PROVIDE SHEAR WALL SHEATHING AND NAILING FOR THE ENTIRE LENGTH OF THE WALLS INDICATED ON THE PLANS. ENDS OF FULL HEIGHT WALLS ARE DESIGNATED BY EXTERIOR OF THE BUILDING, CORRIDORS, WINDOWS, OR DOORWAYS OR AS DESIGNATED ON PLANS. SEE PLANS FOR HOLDOWN REQUIREMENTS.

(5) SHEATHING EDGE NAILING IS REQUIRED AT ALL HOLDOWN POSTS. EDGE NAILING MAY ALSO BE REQUIRED TO EACH STUD USED IN BUILT-UP HOLDOWN POSTS. REFER TO THE HOLDOWN DETAILS FOR ADDITIONAL INFORMATION.

(6) INTERMEDIATE FRAMING TO BE WITH 2X MINIMUM MEMBERS. FIELD NAILING 12" O.C.

(7) FRAMING CLIPS: A35 OR LTP5 OR APPROVED EQUIVALENT, U.O.N., INSTALL LTP5 CLIP WITH LONG LEG HORIZONTAL.

(8) A35 AND LTP5 CLIPS TO BE INSTALLED WITH Ø.131 x 2½" NAILS WHERE INSTALLED OVER SHEATHING. HSLQ37-SDS2.5 TO BE INSTALLED WITH ¼"x2½" SDS SCREWS DIRECTLY TO FRAMING. PROVIDE DOUBLE JOIST, RIM OR EQUAL WHERE HSLQ37-SDS2.5 ARE SPECIFIED

(9) SILL PLATES AT FOUNDATION TO BE 3x U.O.N.

(10) WHERE PLATE ATTACHMENT SPECIFIES (2) ROWS OF NAILS, PROVIDE DOUBLE JOIST, RIM OR EQUAL. ATTACH PER DETAILS.

(11) ANCHOR BOLTS SHALL BE PROVIDED WITH STEEL PLATE WASHERS 1/4"X3"X3". EMBED ANCHOR BOLTS 7" MINIMUM INTO THE CONCRETE.

(12) PRESSURE TREATED MATERIAL CAN CAUSE EXCESSIVE CORROSION IN THE FASTENERS. PROVIDE HOT-DIPPED GALVANIZED (ELECTRO-PLATING IS NOT ACCEPTABLE) NAILS AND CONNECTOR PLATES (FRAMING ANGLES, ETC.) FOR ALL CONNECTORS IN CONTACT WITH PRESSURE TREATED FRAMING MEMBERS

ALTERNATE NOTES

(13) 7/16" APA RATED SHEATHING (OSB) MAY BE USED IN PLACE OF 15/32" SHEATHING PROVIDED THAT ALL STUDS ARE SPACED AT 16" O.C.

(14) WHERE WOOD SHEATHING (W) IS APPLIED OVER GYPSUM SHEATHING (G), CONTACT THE ENGINEER OF RECORD FOR ALTERNATE NAILING REQUIREMENTS.

(15) AT ADJOINING PANEL EDGES, (2) 2X STUDS NAILED TOGETHER MAY BE USED IN PLACE OF A SINGLE 3X STUD. DOUBLE 2X STUDS MAY BE CONNECTED TOGETHER BY NAILING THE STUDS TOGETHER WITH 3" LONG NAILS OF THE SAME SPACING AND DIAMETER AS THE PLATE NAILING.

(16) CONTACT THE ENGINEER OF RECORD FOR ADHESIVE OR EXPANSION BOLT ALTERNATIVES TO CAST-IN-PLACE ANCHOR BOLTS. (SPECIAL INSPECTION MAY BE REQUIRED)

(17) MINIMUM NAIL LENGTH IS BASED ON REQUIRED PENETRATION INTO FRAMING MEMBER OF 1½"

10

ILG

I.L. GROSS STRUCTURAL ENGINEERS

23914 56th Avenue W. ~ Suite 200
Mountlake Terrace, WA 98043-5263
Ph: (206) 623-0769, (425) 640-7333
www.ilgross.com

MARK T. SPEIDEL STATE OF WASHINGTON 43713 STRUCTURAL ENGINEER PROFESSIONAL ENGINEER 07/2023

SAFFOLD ADU

514 WASHINGTON AVE
MUKILTEO WA 98275

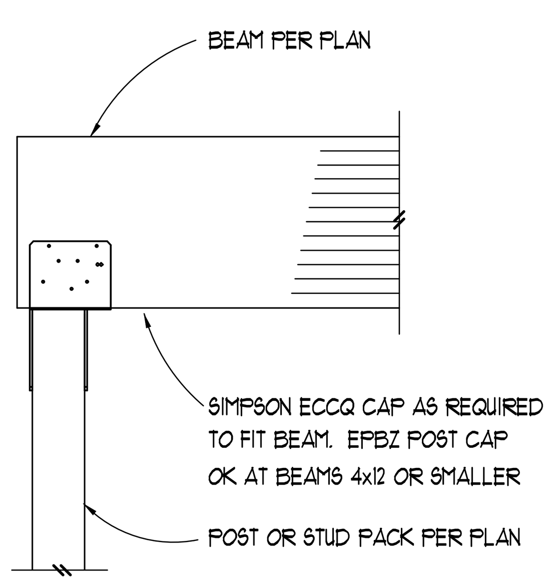

BEAM TO POST BELOW CONNECTION - END CONDITION 11

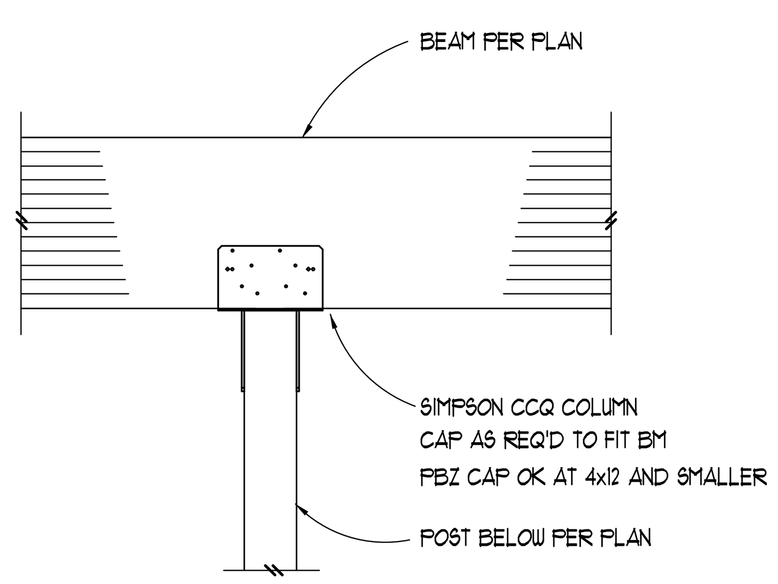

TYPICAL BEAM TO POST BELOW CONNECTION 12

EXTERIOR WALLS

FOR 6" WALLS (MAX. 8'-6" HIGH): 2x6 STUDS @ 16"oc, DF COSTR. GRADE
FOR 6" WALLS (MAX. 13' HIGH): 2x6 STUDS @ 12"oc, DF COSTR. GRADE
FOR 6" WALLS (MAX. 20' HIGH): 2x6 LVL STUDS @ 16"oc
FOR 8" WALLS (MAX 16' HIGH): 2x8 STUDS @ 16"oc, DF CONSTR. GRADE

INTERIOR WALLS

FOR 4" WALLS (MAX. 10' HIGH): 2x4 STUDS @ 16"oc, DF CONSTR. GRADE
FOR 4" WALLS (MAX. 13' HIGH): 2x4 STUDS @ 12"oc, DF No 1 GRADE
FOR 6" WALLS (MAX. 13' HIGH): 2x6 STUDS @ 16"oc, DF CONSTR. GRADE

NOTE: REFER TO ARCHITECTURAL DRAWINGS FOR REQUIRED DEPTH OF STUD WALLS. INDIVIDUAL STUD SIZES, GRADES AND SPACING SHOWN IN SCHEDULE ABOVE APPLY U.O.N. ALL MAXIMUM HEIGHTS ARE TO BRACING POINTS OF STUD WALL TOP PLATE, I.E. BOTTOM OF RAFTERS, ROOF TRUSSES, OR BRACING FRAMING MEMBER.

TYPICAL WALL FRAMING SCHEDULE 13

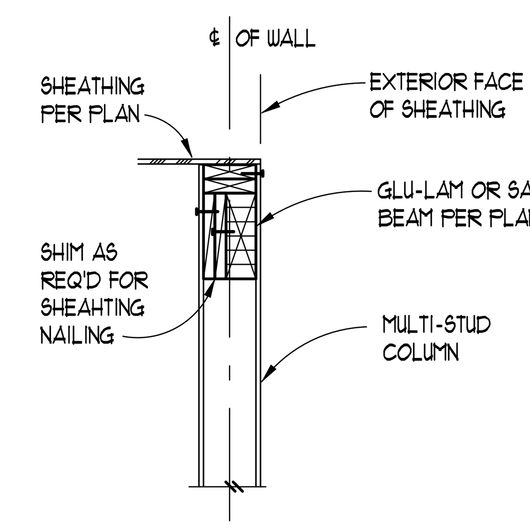

HEADER PLACEMENT AT MULTI-STUD SUPPORT

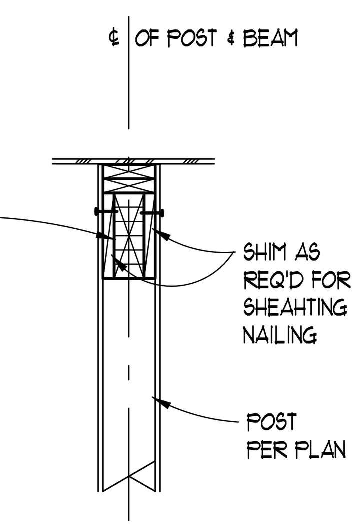

HEADER PLACEMENT POST OR TS COLUMN

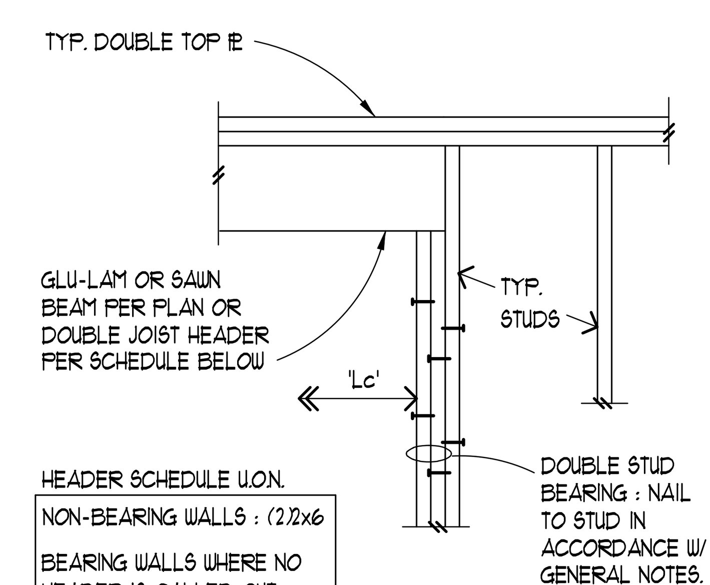

HEADER SCHEDULE U.O.N.

NON-BEARING WALLS : (2)2x6

BEARING WALLS WHERE NO HEADER IS CALLED OUT:
Lc < 3'-6" (2)2x6
Lc < 5'-0" (2)2x8
Lc < 7'-0" (2)2x10

TYPICAL HEADER U.O.N. 15

REVISIONS

NO	DATE	DESCRIPTION

TITLE

TYPICAL WOOD DETAILS

DESIGNED	RLM
DRAWN	KMH
CHECKED	RLM
DATE	07/10/2023
JOB NUMBER	

SHEET NO.

S4.0

SDCI REVIEW

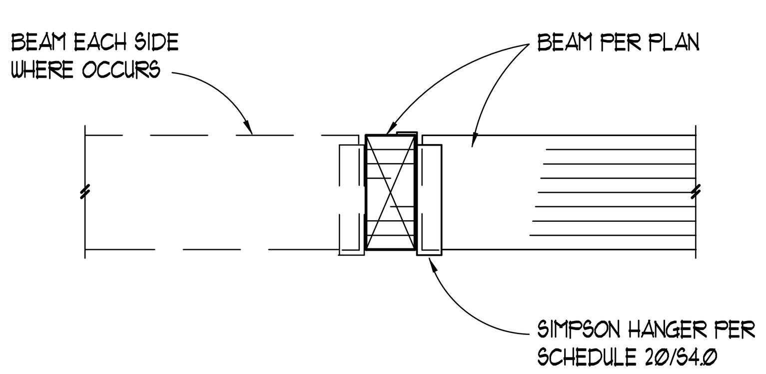

16

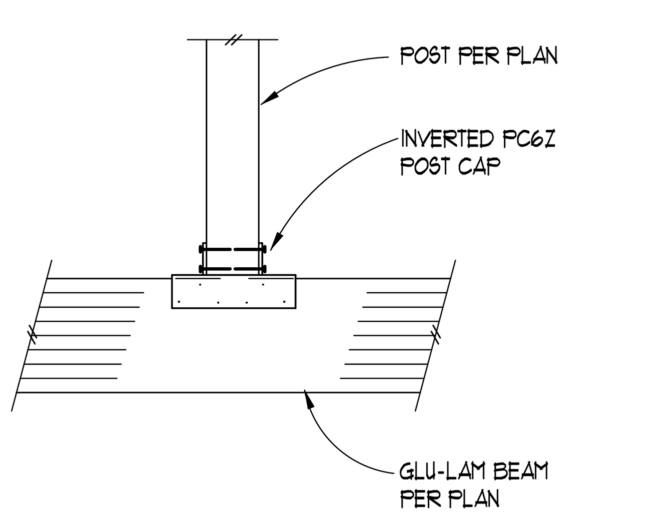

POST TO BEAM BELOW CONNECTION 17

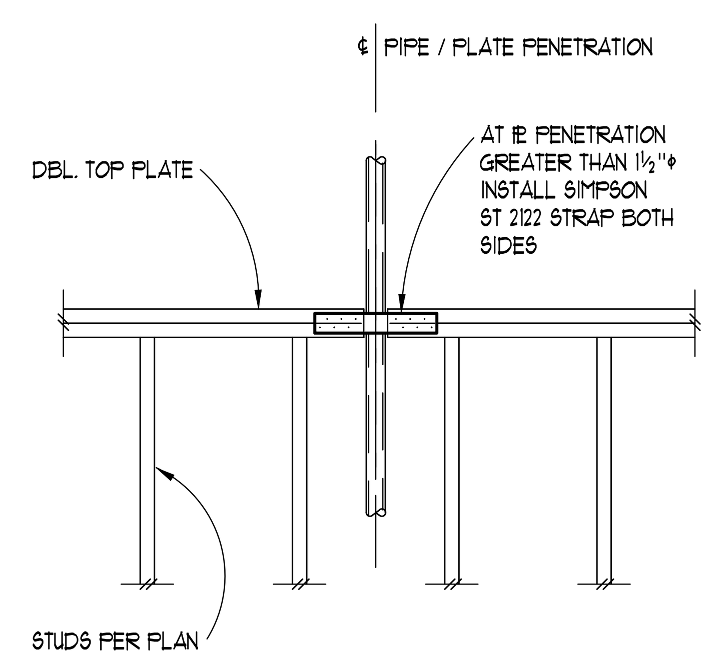

TYPICAL TOP PLATE PENETRATION 18

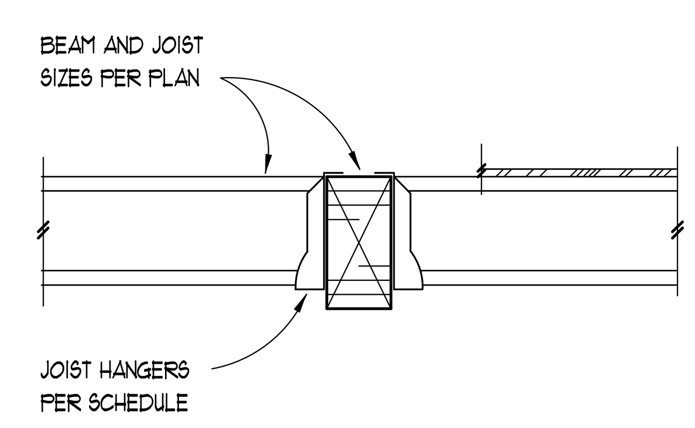

TYPICAL INTERIOR BEAM SECTION 19

TYPICAL HANGER SCHEDULE

BEAM SIZE	HANGER REQUIRED	CAP. (Kips)
2x SAWN RAFTERS	LU (OR LUS) SERIES	1.06
(2) 2x10 OR LESS	U210-2 (OR SIM)	1.86
(2) 2X12	HU212-2 (NAIL ALL HOLES)	2.95
3½" x 11⅞" LVL or PSL	HUCQ412-SDS	5.56
5¼x11⅞" LVL OR PSL	HGUS5.50/12	9.15
5⅛X 12" (OR 10½") GLB	GLT5	8.16
3⅛x12" (OR 10½") GLB	GLT3	8.16
6¾x12" GLB	LEG7	16.3
8¾x 13½" GLB	LEG7	16.3
8¾x15" GLB	MEG7	19.7
7x14" PSL	MEG7	19.7

HANGERS SPECIFIED IN SCHEDULE OR ON PLANS ARE MANUFACTURED BY SIMPSON STRONG TIE, INC. UNLESS OTHERWISE NOTED. CAPACITIES ARE BASED ON THE MOST RECENT CATALOGUE AND ICC REPORTS FOR THE MODELS LISTED.

ALTERNATE HANGERS MAY BE SUBSTITUTED AT THE CONTRACTOR OR OWNER'S OPTION, PROVIDED THEY ARE APPROVED BY THE ENGINEER OF RECORD AND HAVE A CURRENT ICC REPORT STATING THEIR CAPACITY MEETS OR EXCEEDS THE DESIGN CAPACITY LISTED ABOVE.

DESIGN CAPACITIES LISTED ARE BASED ON Douglas Fir FRAMING LUMBER AS STATED IN THE GENERAL STRUCTURAL NOTES AND GENERAL FLOOR LOADING.

20

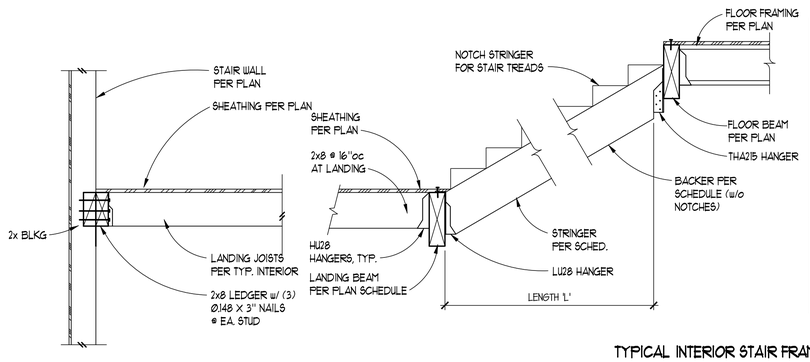

STRINGER TYPE	STRINGER	SPACING	MAX ' L '	LANDING BEAM
SINGLE NOTCHED STRINGER	2x12 DF # 2	@ 24" oc	4'	4x12
		@ 12" oc	5.5'	
	LSL 1¾x11⅞	@ 12" oc	8'	
DOUBLE NOTCHED STRINGER	(2) 2x12 DF # 2	@ 12" oc	8'	
	(2) LVL 1¾x11⅞	@ 12" oc	10.5'	6x12
SINGLE NOTCHED 2x12 or LSL STRINGER W/ BACKER	BACKER			
	2 x 6	@ 24" oc	8.5'	6x12
	2 x 8	@ 24" oc	10.5'	
	2 x 10	@ 24" oc	11.5'	
	2 x 12	@ 24" oc	13.5'	

* FOR STRINGER LENGTHS OVER 13.5', SEE PLAN FOR SIZE

TYPICAL INTERIOR STAIR FRAMING

3

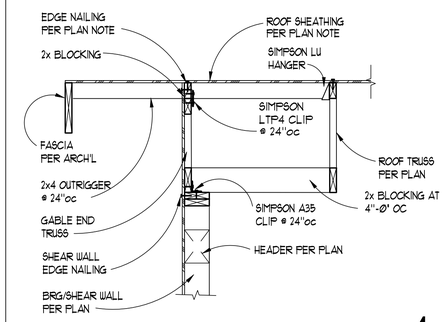

TYPICAL SCISSOR TRUSS AT EXTERIOR WALL PARALLEL

4

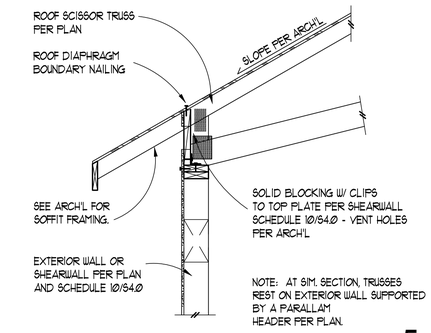

TYPICAL SCISSOR TRUSS AT EXTERIOR WALL PERPENDICULAR

5

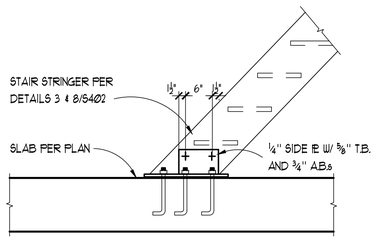

6

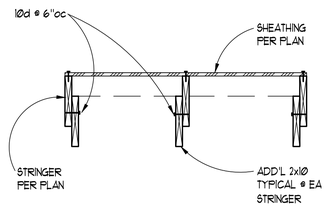

7

8

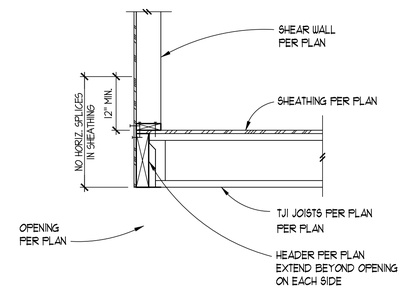

SHEAR WALL OVER HEADER

9

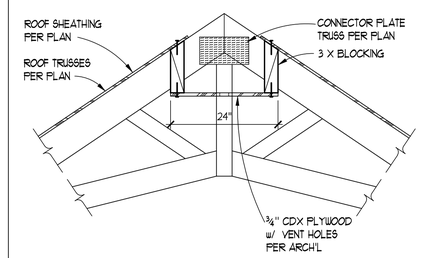

CONTINUOUS RIDGE VENT

10

11

12

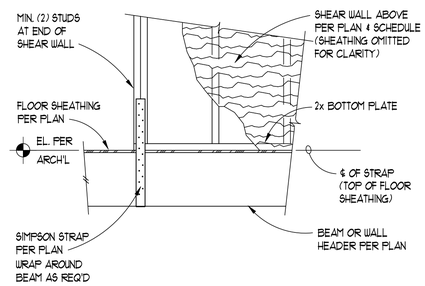

TYPICAL HOLDOWN STRAP CONNECTION AT BEAM / HEADER

13

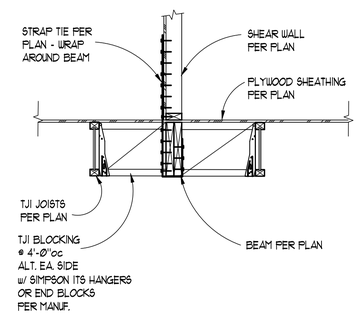

TYP SINGLE SW W/ JOISTS PARALLEL

14

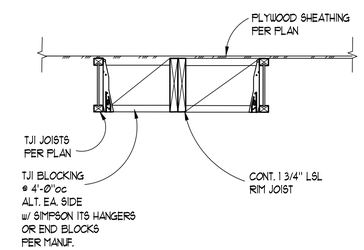

15

16

17

18

19

20

ILG
I.L. GROSS
STRUCTURAL ENGINEERS
23914 56th Avenue W. ~ Suite 200
Mountlake Terrace, WA 98043-5263
Ph: (206) 623-0769, (425) 640-7333
www.ilgross.com

MARK T. SPEIDEL
STATE OF WASHINGTON
43711
PROFESSIONAL ENGINEER
07/10/2023

SAFFOLD ADU

514 WASHINGTON AVE
MUKILTEO WA 98275

REVISIONS

NO.	DATE	DESCRIPTION

TITLE

WOOD FRAMING DETAILS

DESIGNED	RLM
DRAWN	KPH
CHECKED	RLM
DATE	07/10/2023
JOB NUMBER	

SHEET NO.

S4.1

SDCI REVIEW